MANUAL
OF
TECHNICAL DESIGN

TOWN OF EAST HARTFORD
MANUAL OF TECHNICAL DESIGN

TOWN ENGINEER DOUGLAS R. WILSON, P.E.

Contact Information
Email: engineering@easthartfordct.gov
Phone: (860) 291-7380

DEVELOPED BY THE EAST HARTFORD ENGINEERING DIVISION

ENDORSED BY THE EAST HARTFORD INLAND WETLAND – ENVIRONMENT COMMISSION ON JANUARY 23, 1994.

ENDORSED BY THE TOWN PLANNING AND ZONING COMMISSION ON MARCH 23, 1994.

REVISION #1 - November 9, 1999
REVISION #2 – October 5, 2022

TOWN OF EAST HARTFORD
DESIGN MANUAL
TABLE OF CONTENTS

Pages

Traffic 6

Plan Requirements & Existing Conditions 10-11

Site Development 13

Parking Stall Requirements 14
Curb Cuts/Driveways 14
Pavement Design 14
Site Lighting 14
Dumpster 15
Loading Areas 15
Monumentation 15
Grading 16
Buildings/Structures 17
Retaining Walls 17
Landscape Plan 18
Planting Season 18
Construction Schedule 18
Preconstruction Meeting 18
Construction 19
Inspection 18
Work within the State ROW 19
Utility Coordination 19
Public Trees 20
Construction Season 20

General Hydraulic Design Requirements 22

Channel Right of Way 23
Drainage Easements 23
Sedimentation Structure 24
Intersection Grading 24
Private Drains 24
Drainage Standard Details 24
Design Criteria 24
Subdivision/Public Improvements 26
Private Sites 26
Special Drainage Structures 26
Specifications for Storm Drainage Improvements 26

Drainage Design Formulas / Requirements 27

Rational Method 27
Inlet Capacity 28
Design Storm Criteria 28
Detention Basins 29
Drywell Design 30
Upgrading Existing Facilities 32
Motor Vehicle Facilities 33

Erosion Control.....37

Excavations, Fills and Grading 38
Implementation Procedures 38
Conditions Relating to Erosion Control 39

Bonding.....40

Bond Reductions 40
Record Drawings 41
Flood Hazard Development 43

Appendices

A – Miscellaneous Notes and Specifications
B – Standard Details
C – Drainage Design Forms and Design Aids
D – Zoning Illustrations

REVISION #2 - 05 OCTOBER 2022

TOWN OF EAST HARTFORD
MANUAL OF TECHNICAL
DESIGN

INTRODUCTION

The purpose of this design manual is to provide the designer with standards to be used to prepare plans that will be reviewed within the Subdivision Regulations, Zoning Regulations and the Inland Wetland-Environment Regulations. The manual gives design minimums and maximums, formulas, details, procedures and other information that will be useful. The standards found herein are general guidelines that are to be used in conjunction with the discussion with Town staff to reach the application and permit stage. Every site has its own unique characteristics and must be prepared and dealt with on its own merits and there can b no substitute for an exchange of information with Town staff to insure all concerns have been addressed.

In the event a situation occurs that is not covered within this manual, the designer is advised to receive prior approval from the Town Engineer concerning the acceptance of a particular procedure, formula or design.

The State of Connecticut Department of Transportation Standards Specification for Roads, Bridges and Incidental Construction, Form 814A or as amended and Standard Details shall be incorporated into this manual, except as revised and modified herein.

Douglas R. Wilson, P.E
Town Engineer

SECTION 1

TRAFFIC

The Town of East Hartford is an established community with a strong industrial base mixed with many residential neighborhoods. East Hartford is located to the east of the capital city of Hartford where many large employers are located. The network of thoroughfares within the Town not only carry local intertown traffic for residents, but intratown traffic for commuters who live outside of East Hartford but work in East Hartford and commuters who live outside of East Hartford but pass through the Town to their places of employment.

The Town's arterial and collector roadways are used heavily during peak hours. The extensive improvements to the infrastructure have caused traffic patterns to change and they will continue to fluctuate until the final layout continues to be an important part of the development process.

The close proximity to state roads and the size of developments in many cases will involve prior approval by the State of Connecticut Traffic Commission.

Traffic Information Required

Site Generated Traffic

The ITE Trip Generation Report and factors shall be utilized in the required traffic analysis. Data should reflect a successful day for the development. Values, which are different than those, suggested by the ITE Trip Generation Report (current edition) need to be substantiated.

Morning peak hour for the roadway providing access to the site.

Afternoon peak hour for the roadway providing access to the site.

Morning and afternoon peak hour of the generator if different than the morning and afternoon peak hours of the adjacent roadways.

Other peak hours of the generator (weekday, midday, evening, weekend.)

Identify the hours of the day, day of the week, and the reason the hours and days used in Section 1.A.1 through 4, above were chosen.

Percent distribution of generated traffic, by direction, for each major road leading to the area and at the access points, for the same peak hours as in Section 1.A.1 through 4, above.

Flow diagrams for Section 1.A.1 through 4 and 6, above.

Note:

For shopping centers, projected traffic volumes as described in Section 1.A.1 through 7, above should have two submittals – one for Fridays and the other for Saturdays and should reflect a successful Friday and Saturday shopping day outside the Thanksgiving and Christmas shopping days; the gross floor area should be broken down by the major tenants.

For restaurants, provide size and location and indicate whether it is to be a fast food, or be a sit-down facility. Indicate if the facility has a drive-through.

For bank, provide size and location and indicate if a drive-through facility will be utilized.

For apartments, condominiums, hotel, and motels, the number of one, two, and three bedroom units, and the square footage area of each type of unit should be noted.

For other types of generators the Town's Legal Traffic Authority shall be contacted for appropriate information to be submitted.

Existing Traffic

Existing turning movement counts are to be completed at intersections that will experience an increase of 100 or more vehicles during one or more peak hours as in Section 1.A.1 through 4 above. Any intersection immediately adjacent to the site or that will receive more than 75 percent of the site traffic shall be counted.

Flow diagram showing existing traffic for the same peak hours as in Section 1.A.1 through 4, above.

Background Traffic

Data should be adjusted to reflect the background traffic for the month that carries the heaviest ADT on the subject roadway when the development will be occupied – should not reflect an average annual daily traffic. The existing traffic data is to be adjusted by an annual growth factor for each year from the time the existing counts were made to the year when the development will be fully opened. Inquires regarding seasonal adjustments and yearly growth factors should be directed to the Legal Traffic Authority.

Background traffic for the same peak hours as in Section 1.A.1 through 4 above, in the year the development is scheduled to be fully occupied.

Identify the other development whose traffic is included in the background traffic.

Identify the seasonal and annual growth factors applied to the existing traffic and justify their selection.

Flow diagrams for Section 1.C.1 above.

Combined Traffic

Data shall include background plus site generated traffic.

Combined traffic for the same peak hours as in Section 1.A.1 through 4, above.

Flow diagrams for Section 1.D.1 above.

Capacity Analysis

Include all input data, supportive computation sheets and/or charts. When the analysis indicates improvements are necessary, recommended improvement plans should be submitted. Analysis should be provided for intersections that will be significantly impacted by the development as identified in Section B above. The analyses should be conducted for the time periods identified in Section 1.A.1 through 7 above for the following traffic conditions.

1. Existing conditions
2. Background traffic without improvements
3. Combined traffic without improvements
4. Combined traffic with improvements (if required)
5. The submitted analysis should be conducted in accordance with Transportation
6. Research Board Special Report 209 (1985 Highway Capacity Manual.)
7. Inquiries concerning the format may be directed to the Legal Traffic Authority.

Storage / Queue Analysis

The submission of a Storage and/or Queue analysis supporting the background and combined traffic capacity analysis provided under Section 1.E.1 and 2 is usually necessary under the following conditions:

1. When exclusive turning lanes exist or are proposed

2. When there is a potential for vehicular backups between adjacent intersections and/or major drives.

3. When limited stopping sight distance will exist on a signalized approach.

4. Off-ramps approaches to signalized intersections.

Other conditions may be identified by the engineer or the Legal Traffic Authority in which a Storage/Queue analysis is required.

Sight Distances

Intersection sight distance shall be provided for any site driveways. The Department of Transportation guidelines shall be utilized to determine minimum and desirable sight distance.

Accident Analysis

Accident problem areas (if any) in the vicinity of the site or off site impacted locations, should be identified.

Mass Transit

The applicant should provide a statement on how the use of buses, trains, vanpools, and car pools by employees and/or patrons has been considered, especially in terms of the development's internal circulation and parking.

Improvements of Public Facilities

If any improvements are planned to Town or State roadways as a result of the development's traffic, forty (40) scale plans showing the proposed improvements shall be submitted for review along with the traffic information.

Roadway Classification

The designer shall receive approval from the Town Engineer concerning the roadway classification, which will be utilized in the design of a project. The typical sections, utility locations, and minimum design values are found in the standard details located in Appendix B.

SECTION 2

PLAN REQUIREMENTS

The following information is required for all site plans, subdivision plans and lot plans:

1. Title block including names of the developer, owner, address of development, the name and address of the design professionals.

2. Vicinity map (scale 1" = 200') with the site and zoning classification clearly defined (not required for plot plan.)

3. Date of original drawing and all subsequent revisions.

4. Provide graphic scales. Plan shall have a scale of either 1"=20' or 1"=40'. Any variation from these scales will require approval from the Town Engineer.

5. The plans shall conform to the legal filing size requirements but shall be limited to a maximum of 24" x 36".

6. Signature, ink and impression seal of Professional Engineer and/or Land Surveyor licensed in the State of Connecticut.

7. Legend, list of abbreviations, north point and match marks (if more than one sheet is required).

8. Copy of all approval letters must be on the plans.

9. Zoning Data Block – The Building and Development Departments should be contacted concerning the required data. (Not required for plot plans.)

10. The Town's general not concerning the scheduling of inspections shall be added to the first sheet of the site plan. (See Appendix A)

11. Narrative describing the general site construction sequencing.

EXISTING CONDITIONS REQUIREMENTS

The following information on existing site conditions should be included on all plans that are submitted.

1. All boundaries of lots submitted shall be in accordance with A-2 survey as defined in "Recommended Standards for Surveys and Maps in the State of Connecticut" as amended. All maps used in the development of the plans shall be referenced on monumentation shall be noted.

2. Topographic contours at a maximum of two foot intervals extending 50 feet beyond boundary line. Spot grades may be required at the limits of the development to insure that the project will have no adverse impacts on the adjacent properties.

3. Bench marks shall be shown and the datum indicated.

4. All Easements and Right-of-Ways on site including indemnification and descriptions, location, width and other dimensions necessary for description. Survey data shall be provided for all easements.

5. All Structures on site including but not limited to buildings garages sheds, decks, and foundations.

6. All lots shall be denoted by assessor’s map and lot number.

7. All Zone District Boundaries.

8. Drainage Features including types of structure, location, top of frame and invert elevations, gradients, size and type of pipe.

9. Regulated Inland wetlands and buffer zones including marshes, ponds, streams, or similar conditions on site and within 200 feet of boundary. Regulated Inland wetlands shall be flagged and certified by a soil scientist registered in the State of Connecticut. Limits of Wetlands shall be surveyed by a Land Surveyor registered in the State of Connecticut. The plans shall shoe the wetland flag number as identified by the Soil Scientist. Flood Hazard Zone elevation, location and area covered indicating apparent high water levels at 100 year flood levels. See Federal Flood Insurance Rate Maps, revised October 23, 1981 on file in the East Hartford Engineering Division and the Office of the Town Clerk. Stream Channel Encroachment Environmental Protection shall be added to the plans.

10. Detailed study of soils and subsoils for certain conditions warranted by Engineering Division including percolation, water table or mottling, SCS Soils Map Overlay of the entire area.

11. Rock outcropping shall be shown.

12. All current adjacent landowners and addresses.

13. Dimensioned Street Right-of-Way.

14. Street Pavement location and width including the location of curb cuts, type of curbing, sidewalks, etc.

15. All existing roads and trails trough and abutting the tract.

16. Street Name (s)

17. Street centerline and gutter elevations at intersections and other critical areas.

18. Utility Structures including location, type and size of the following: Water, Electric, Utility Transformer Pads, Junction Boxes, Telephone, Cable TV, Sewer, and Gas Main.

19. Marshes, Pond, Streams including the location, apparent high water level water on the date of the survey, and maximum depth of water at critical points.

20. Seepage Test and Boring and/or Test Pit Data including the date, location shall be shown on the plans. The subdivision regulations shall be consulted for additional information. The Engineering Division should be contacted n a minimum of twenty four (24) hours prior to the tests, so that a representative for the Division may be present during the testing.

21. Town or other Public Lands

22. Treeline and trees over six inches caliper

23. Existing Signs

24. Lot Area and Total acreage of the property.

SECTION 3

SITE DEVELOPMENT

The zoning regulations should be consulted to determine the appropriate set back requirements, restrictions on the location, and the required number of parking spaces. The Zoning Enforcement Officer shall be contacted concerning any interpretations of the parking requirements.

It is the responsibility of the design professional to ensure that all aspects of the development conform to the requirements of the American Disabilities Act (ADA).

The pavement provided for parking, drives and loading areas shall be a minimum of three (3) inches of compacted bituminous concrete in two equal courses on a six (6) inch process gravel base. The values for the pavement and base material are minimums; greater thickness may be required, where necessary. All parking lots and drives shall be curbed and drainage facilities provided.

Concrete sidewalks shall be provided for pedestrian use. The sidewalk shall be a minimum of four (4) feet wide exclusive of any overhang, which may occur. All sidewalks shall be handicap accessible. The Building Department and applicable State Building Codes shall be contacted and referenced concerning handicap requirement. Sidewalks within the Town or State right-of-ways shall be extended through the drives. Any sidewalk which extends through a driveway shall be eight (8) inch thick reinforced concrete walk (see standard details).

The design of handicap ramps shall take into account the affects of the drainage design on the proposed layout. No drainage structures shall be located within the limits of a handicap ramp.

Vehicle turn around shall be provided for all end parking stalls. The design of the parking lot shall prevent vehicles backing over street right-of-way line, sidewalks or property lines.

The location and layout of existing parking areas shall be provided on the plans. The impacts of any proposal on the existing parking facilities shall be investigated and information provided. All signage shall conform to the current edition of the Manual on Uniform Traffic Control Devices (MUTCD).

Parking Stall Requirements

(Click Here) 3.2

All stalls shall be angled toward the direction of traffic.

Parking stalls shall be delineated on pavement surfaces by 4 inch pavement marking as specified by the State of Connecticut Form 814A.

All dimensions for parking stalls shall be clear distances with no obstructions. All curb cuts, parking stalls, drives and radii shall be dimensioned on the plans. The parking lot shall be dimensionally located.

Curb Cuts/Driveways

Driveways shall not be more than thirty (30) feet wide for commercial sites measured at the street line and parallel to the street line unless otherwise approved by the Town Engineer and/or the State of Connecticut where applicable. A curbed island for channelizing traffic may be required if a driveway wider than thirty (30) feet is approved.

Driveways must be perpendicular or radial to the roadway. Adequate line of sight as approved by the Town Engineer shall be provided at all drives.

Curb cuts should be limited to one per property, unless otherwise approved by the Town Engineer. On corner lots the driveway shall be located as far from the intersection as is practical.

Pavement Design

The pavement thickness found in the standard details and these guidelines are minimum values. The Design Engineer is to provide a pavement design to verify whether or not the minimum standard is acceptable.

If the minimum standard is not sufficient, the pavement shall be built in accordance with the approved pavement design.

Site Lighting

Site lighting shall be provided for all developments except for individual single or two family residential homes. The lighting shall be located and directed to avoid lighting any area beyond the property lines. Light standards within parking areas shall be located within curbed islands or at locations, which will not affect traffic flow, reduce parking tall area or interfere with pedestrian traffic. Details for the standards, fixtures, and bases shall be provided on the plans. An electrical site plan showing locations, conduit locations, and wiring and lighting pattern distribution must be provided.

Dumpster

A dumpster pad and enclosure shall be provided on all commercial, industrial and multi-family residential sites. The dumpster pad shall be an eight (8) inch reinforced concrete pad (see standard detail). The dumpster shall be enclosed on all four sides with a minimum six (6) foot high fence, which will screen the dumpster from view. Provisions shall be incorporated into the site layout to ensure that a "SU-30" design vehicle has access to the dumpster. The dumpster shall be located such that, while being emptied, the vehicle will not negatively affect traffic floe within the site or access to the site.

Loading Areas

Truck loading area shall be provided as required by the zoning regulations. The layout of loading areas shall be such that adequate space is provided for safe turning movements. All turning movements must be confined to the site. The design vehicle to be used in the design of the layout shall be a "WB-50", unless otherwise approved by the Town Engineer. Loading areas, which will include the parking or storage of trailers, shall provide a reinforced concrete pad for the trailer's supports.

Subdivision and Property Line Monumentation

Official East Hartford street boundary stones shall be placed at all block corners, at angle points, and the points of curves in streets and at such intermediate points as required by the Town Engineer. The location of all monuments and iron pins shall be indicated on the plans subject to the satisfaction of the Town Engineer. Horizontal coordinates based on the Metropolitan District datum shall be provided for all monuments. The monuments and iron pins shall be furnished by the developer, and conform to the Town of East Hartford standard details. The brass plugs to be used atop of the street bound stones are available from the Engineering Division for a nominal fee.

After the final grading of the lot has been completed and prior to the issuance of the certificate of occupancy, iron pins shall be placed at all lot corners and at the changes in direction of the lot lines.

The monuments and iron pins must be installed so that the top is even with the finish grade and their accuracy certified by a registered land surveyor.

Monuments located within a paved area shall be set three (3) inches below the finished grade and the top of the monument shall be encased with a protective cover which conforms to the standard details.

Grading

It is the policy of the Town of East Hartford to discourage massive regrading of subdivisions and private sites where such earth moving would cause and extreme cut or fill for streets, drives or structures location; stripping of natural ground cover; and the destruction of worthwhile topographic features. To this end, site layouts should be designed to fit the existing natural conditions of the site, insofar as such design is consistent with good engineering practice, other standards for street and lot grades, drainage which are set forth in these guidelines. Regarding of the site which will alter the natural watershed limits will not be allowed.

Subdivision lots shall provide minimum yard areas having a slope not greater than five (5) percent in grade as follows:

Extending twenty five (25) feet in front and rear yards and ten (10) feet perpendicular to the sides of the proposed house (subject to Subdivision Regulations section 8.8C) except where earth is bermed against the north face of the building to minimize the amount of exposed wall for the purpose of energy conservation.

Residential sites shall provide driveway access from the street to the garage, carport, or parking place at a slope not exceeding twelve (12) percent in grade. Commercial and Industrial sites shall provide driveway access at a slope not to exceed ten (10) percent in grade.

The maximum slope for all other pavement surfaces shall be eight (8) percent unless otherwise noted.

The minimum slope for all pavement surfaces shall be one-half (1/2) percent in grade.

Subdivisions shall have no artificial slope steeper than 3:1 resulting from the regrading of the natural land at any location.

Private sites shall have no artificial slope steeper than 3:1 for maintained (grassed) areas resulting from the regrading of the natural land. 2:1 slopes will be allowed where approved landscape treatments are used or where adequate soils information has been provided.

All regraded areas shall be covered with loam to a depth of six inches and seeded.

The burial of tree stumps, shrubs and debris that have been cleared from the land shall be prohibited on all subdivisions and private sites.

Slope rights shall be provided where necessary for the development.

The following information on the proposed grading shall be provided:

1. Proposed contours (two (2) foot intervals – maximum)

2. Spot grades – corners of building and parking areas; drainage divides; cul-de-sacs; etc.

3. Benchmark

4. First floor elevation of structures.

5. Garages floor elevations.

6. The current NGVD vertical datum.

Buildings & Structures

The location of all proposed buildings and additions shall be provided. Property line offsets and/or building corner coordinates shall be provided to dimensionally locate all structures.

The following information on the buildings shall be provided:

1. Dimensions of all structures.

2. Locations of ingress and egress points.

3. Locations of loading areas and overhead doors.

4. Areas to be used for any outside storage.

5. Area of the building footprint and the number of floors shall be indicated on the plans.

6. Building elevation drawings may be required by the Town Engineer when previously required information does not provide adequate detail.

Retaining Walls

Soil data will be required to verify the soil conditions within the area of any proposed retaining wall.

All retaining walls shall be designed by a Professional Engineer. Construction details and methods shall be provided on the plans.

Protection, in the form of a fence or rail shall be provided along the top of wall in accordance with applicable building codes.

Landscape Plan

A plan shall be provided showing the proposed landscaping for the site including:

- size, type, number, location and types of plantings, seeding schedule and planting details. All extensive landscape plans shall be prepared by a registered Landscape Architect. Other landscape plans shall be prepared by a registered Landscape Architect if required by the Design Review Committee.

Planting Season

Unless otherwise shown on the plans or directed by the Town Engineer, the planting season shall be as indicated below. No planting shall be done in frozen ground or when the ground is snow covered, or when the soil is otherwise in unsatisfactory condition for planting.

Deciduous Material

Spring: March 1 – May 15 (inclusive)
Fall : October 15 – December 15 or until the ground freezes

Evergreen Material

Spring: March - June 1 (inclusive)
Fall : August 15 – October 1 (inclusive)

Construction Schedule

The plans shall include information on the proposed schedule of construction including any phasing of the development.

Preconstruction Meeting

Prior to the start of any construction activity, the developer and contractor shall schedule a meeting with the representatives f the Engineering Division to discuss all aspects of construction, construction phasing, and construction with the Town of East Hartford and/or utility companies.

Inspection

It is the responsibility of the developer / owner to ensure all necessary and required inspections are made. Inspections which must be completed by the Town of East Hartford will be limited to the hours between 8:30 A.M. and 4:30 P.M., Monday through Friday. A minimum of twenty four (24) hour notice is required to schedule inspections.

Construction

Prior to the start of any construction, all property lines must be staked and flagged and all sedimentation and erosion control measures installed. A construction entrance will be constructed at all access points to and from the site. All construction ingress and egress must be limited to these locations.

Areas onsite which will be cleared must be flagged a minimum of 48 hours prior to the beginning of any work. Clearing will be limited to the areas which will be impacted by the proposed construction. In the case of phased construction, a clearing schedule must be established to minimize the potential of erosion.

Work within State Right-of-Ways

Any construction activities occurring within a State right-of-way will require permits from the Department of Transportation District One Permit Section located in Rocky Hill. The section can be reached at 566-4744.

Town permits are also required for any work which occurs between the curb line and the right-of-way line within a State right-of-way.

Utility Coordination

All construction activities shall be coordinated with the following utility companies:

Natural Gas-Connecticut Natural Gas Corp.
100 Columbus Boulevard
P.O. Box 1500
Hartford, CT. 06144-1500
Phone; (860) 727-3129

Water/Sanitary-Metropolitan District Sewer
555 Main Street
P.O. Box 800
Hartford, CT. 06142-0800
Phone: (860) 278-7850

For Current Utility Contacts see:

"Utility Companies by Town"
published by the DOT Utilities Section

Electricity-Northeast Utilities
P.O. Box 270
Hartford, CT. 06141-0270
Phone: (860) 665-6104

Telephone-Southern New England Telephone
40 Brainard Road
Hartford, CT. 06114
Phone: (860) 725-4531

Cable TV - TCI Cablevision
22 New Park Avenue
Berlin, CT. 06037
Phone: (860) 505-6248

Prior to ant excavation or the issuance of ant permits for work on Town property, Call Before You Dig (1-800-922-4455) must be contacted as per State Statutes.

All utilities must be installed underground and laterals are to be extended to the street line.

Public Trees

The Director of Public Works / Tree Warden shall be consulted if the proposed development required the removal of any existing trees located on Town property.

Construction Season & Time Constraints

No street excavation permits will be issued once the bituminous concrete plants have ceased operations for the winter months except for emergency repairs. All emergency repairs are subject to the approval of the Town Engineer.

No permanent bituminous surface work shall be done between November 1 and April 1 except with the written approval of the Director of Public Works.

B. Parking Stall Requirements

In order for a parking stall to be counted as an accepted parking stall, the stall shall have direct access to a drive and meet the following size requirements.

1. For 90 degree parking:

Driveway / Aisle width	-	24' minimum
Regular stall	-	9' x 18'
Handicap stall	-	as per State standards
Truck loading space	-	12' x 25' with a clearance of 14'
Truck/Bus parking stall	-	The stall size shall be of sufficient size to accommodate the vehicle.

2. Parallel Parking Stalls: - 10' x 22'

3. For Angle Parking:

A	B	C	D	E	F	G
0	9.0	9.0	12.0	23.0	30.0	--
30	9.0	17.3	11.0	18.0	45.6	37.8
45	9.0	19.8	13.0	12.7	52.5	46.5
60	9.0	21.0	18.0	10.4	60.0	55.5
90	9.0	18.0	24.0	9.0	60.0	--

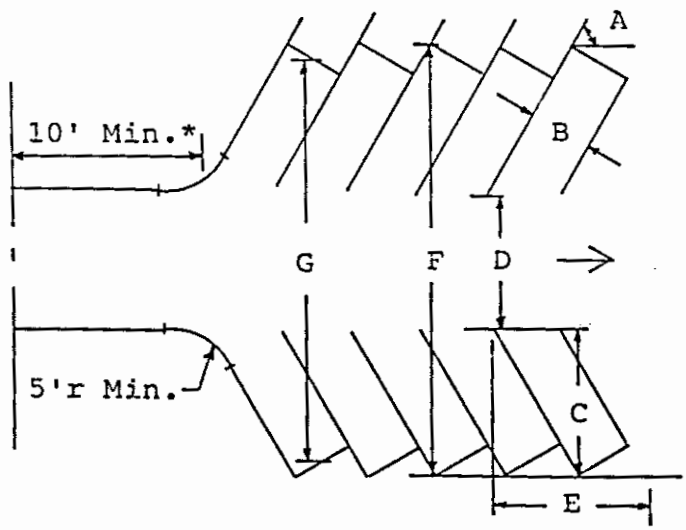

* = Minimum distance required. The zoning regulations may require additional distance.

Minimum drive width shall be 24 feet for 2 way traffic. Drive widths (D) less than 24 feet are for one traffic only.

SECTION 4

GENERAL HYDRAULIC DESIGN REQUIREMENTS

Storm drainage systems constructed under these regulations shall provide for the proper drainage of the tributary area to the satisfaction of the Town Engineer. The developer shall make provisions for the proper elimination of all stagnant water within the limits of the proposed site or subdivision.

The design of the drainage facilities shall be undertaken with due considerations of the rights of the abutters and the responsibilities of the Town. Provisions shall be incorporated to prevent the interruption of natural flows at the limits of the site and to minimize the impacts on the adjacent properties. Water shall not be outletted into a natural depression without an adequate outlet unless the proper rights for storage and/or provisions for adequate outlets have been secured. The storm water runoff shall be investigated to insure that the downstream and upstream owners are not adversely affected by the proposed drainage facilities.

All roofs, paved areas, yards, courts, and courtyards shall drain into a storm sewer system or to an approved place of disposal. In the case of single family dwellings, where approved, storm water is permitted to discharge onto flat areas such as streets or lawns provided the storm water will flow away from the building and not adversely affect the abutting properties.

The design of the drainage facilities should maintain the existing drainage patterns. The diversion of storm runoff from one watershed to another should be avoided wherever practical. Special studies will be required to substantiate the need for any diversion and evaluate its impact.

Where drainage patterns are disturbed by collection, diversion, ponding, reduction, or increased stream velocities, the proposed flow should be designed to return to the existing conditions as soon as possible.

Where culverts are in close proximity to each other, the backwater from the downstream culvert shall be considered in the design of the upstream culverts. The methodology for the back water analysis shall be pre-approved by the Town Engineer.

All culverts shall have approved inlet and outlet structures and erosion protection. Where the velocities from the culverts exceed the maximum allowable for the channel lining, the designer shall provide scour protection

Drainage facilities are intended for the collection and control of storm water runoff. The discharge of sanitary or wastewater into closed storm water systems or open channels is strictly prohibited.

The requirements of all Federal and State agencies shall be incorporated in the planning and design of all drainage facilities.

Any discrepancies in drainage requirements due to State, Federal or other Regulatory Agency guidelines must be brought to the attention of the Town Engineer.

The following design information should be submitted either in a report form or included on the plans submitted for review:

1. The storm return frequency used to evaluate the design.

2. The hydraulic formulas used as the basis for the design. Any computer programs intended for use in a drainage analysis shall be pre-approved by the Town Engineer.

3. Provisions should be included for anticipated development within the watershed above the proposed drainage facility.

4. Reference graphs and/or charts used in the design but not included in the references for this manual.

5. The design criteria, procedures, and any pertinent information incorporated into the design.

6. A drainage area map at an appropriate scale with each catchment area clearly delineated. The following information on each catchment area shall be provided:

   - Label area / structure number
   - Size of drainage area in acres
   - Path and time of concentration

Channel Right-of-Ways

A channel, brook right-of-way or easement of sufficient width to include a ten (10) foot access strip in addition to the width of the channel or brook from top of bank to top of bank, shall be offered for dedication to the Town for drainage purposes. Channels shall be rip-rapped or paved when deemed necessary.

Drainage Easements

Drainage easements, outside of street lines, shall be a minimum of twenty (20) feet wide centered on the storm drain. Easement for, and the outlet pipes shall extend to a suitable existing storm drain or an adequate natural watercourse.

Easement may be required upstream of facilities to allow for the ponding of the design storm, downstream to include boundary of the watercourse until the pre-existing conditions

are re-established, and for construction and maintenance purposes. The need for easements should be addressed in the preliminary design to allow for proper evaluation and action.

Sedimentation Structures

Sedimentation structures shall be installed just before the drainage outfall to help to protect existing watercourses and wetland areas. The location of the structure shall be accessible for maintenance purposes. Sedimentation structures shall be designed in accordance with the latest edition of "Connecticut Guidelines for Erosion and Sediment Control".

Intersection Grading

Where the development streets join exiting streets, the developer must provide drainage at the intersections as necessary, or as directed by the Town Engineer.

Private Drains

The size and location of all private storm drains that connect to the Town storm drainage system shall be approved by the Town Engineer prior to installation. A waiver of claim must be filed by the developer with the Town Clerk and the Director of Public Works. The waiver of claim form is available from the Engineering Division Office. This waiver shall relieve the Town of East Hartford of any responsibility for damage resulting from any failure of the storm drainage system. This waiver shall be part of the deed so as to run with the property as to subsequent purchases.

During the development of a private site, the design should prevent sheet flow from the drives and parking lots from reaching the streets.

Rear yard drains, cellar or foundation drains that are connected to the storm drainage system, must be shown on the final approved plan of the drainage system.

The use of yard drains are allowed in grassed areas, with the approval of the Town Engineer.

Drainage Standard Details

All storm drainage facilities constructed under these Regulations shall conform, wherever possible, to the standard details as shown in Appendix B of this manual.

Design Criteria

Storm sewers are to be designed to flow full with a maximum allowable headwater in the structures limited to one (1) foot below the top of grate or as approved by the Town Engineer.

Storm sewers shall have a minimum grade of one-half (0.5) percent. Variance from this requirement may be granted by the Commission if the storm sewers are designed with a minimum self-cleaning velocity of three (3) feet per second. Any waiver granted on the minimum slope shall require a licensed land surveyor to verify that the pipes are being installed to the proper line and grade on a daily basis. The developer shall be required to submit an as-built survey certified by a Licensed Land Surveyor. The surveyor shall check the line and grade at a maximum of twenty five (25) foot intervals of all pipe runs that have less than one-half (05) percent slope.

A minimum amount of cover shall be provided on all storm drains. The minimum allowable cover requirements are as follows:

Class V RCP - 1 foot
Class IV RCP - 2 feet
ACCMP - 2 feet
PCV/ADS - 3 feet under pavement / loading

Note: minimum cover requirements will be increased if the pipe projects into the base material or the pipe requires additional cover due to the amount of loading which the pipe may be subjected to.

The maximum allowable velocity within any storm drainage pipe shall be twelve (12) feet per second.

A minimum base of three (3) inches of three-quarter (3/4) inch crushed stone shall be provided under all storm drains. If storm drains are installed in water, at least a six (6) inch base of three-quarter (3/4) inch crushed tone shall be provided up to a point six (6) inches above water level.

The area around the sewer barrel shall be compacted to point at least one (1) foot above the pipe before backfilling is done with equipment. In the case of multiple pipe installation, there shall be a minimum separation distance of one foot between the outside diameters of each pipe. If the soil in the area is of clay or any other unsuitable material, the trench shall be backfilled with sharp sand or gravel. Unsuitable material is defined in the Connecticut State Highway Department Standard Specifications for Roads, Bridges and Incidental Construction; Form 814A, 1995 as amended. During winter construction all frost must be eliminated from the trench back-fill.

Subdivisions and Public Improvements shall require reinforced concrete pipe for all storm drainage systems. The class of the storm sewer pipe used shall conform to the requirements of the Connecticut State Highway Department Standard Specifications for Roads, Bridges and Incidental Construction; Form 814A, 1995, as amended.

Private sites shall require reinforced concrete pipe for the storm drainage system. Corrugated metal, ADS and PVC pipes may be in certain cases with the prior approval of the Town Engineer.

Subdivision/Public Improvements

The first catch basin in the storm drainage system shall be located within three hundred fifty (350) feet of the roadway high point. Catch basin spacing and type shall be determined by gutter flow and ponding analysis. A drainage structure, whether a catch basin or manhole, shall be provided at three hundred (300) foot maximum intervals on all storm drains. A drainage structure shall also be provided at each grade change along a storm drain, at each change in horizontal direction and at each junction point of the two or more storm drains.

Private Sites

Catch basins shall be spaced so that the water depth over the grate does not exceed three (3) inches in parking lots used by the general public. A drainage structure (either a catch basin, manhole, or cleanout) shall be provided at each grade change, at each change in horizontal direction, and at each junction point of two or more storm drains.

Subdivision/Public Improvements

The minimum pipe size for all storm drainage systems constructed under these Regulations shall be fifteen (15) inch inside diameter.

Private Sites

The minimum pipe size for all storm drainage systems constructed under these regulations shall be twelve (12) inch inside diameter. Roof leaders and overflow pipes for drywalls may be minimum of six (6) inch inside diameter.

Underdrain outlets shall be connected to drainage structures whenever practical.

When impractical, they shall be terminated with an approval endwall. At all underdrain outlets, a "free outlet" condition should be provided.

Special Drainage Structures

Details of special or unusual drainage structures shall be submitted to the Town Engineer for review and approval.

Specifications for Storm Drainage Improvements

All storm drainage construction shall conform to the requirements of the Connecticut State Highway Department Standard Specifications for Roads, Bridges, and Incidental Construction; Form 814A, 1995, as amended.

SECTION 5 See Revision #2

DRAINAGE DESIGN CRITERIA

The design procedures outlined in the State of Connecticut Department of Transportation "Drainage Manual" – latest edition, shall be followed. Design procedures other than what is outlined by the D.O.T. must be approved by the Town Engineer.

Rational Method

Peak discharges for the design of storm drains for watersheds smaller than two hundred (200) acres may be derived using the rational method where:

Q = ciA
Q = peak discharge in cubic feet per second
c = weighted runoff coefficient
i = rainfall intensity in inches per hour
A = gross area tributary to the drain under design expressed in acres.

1. Rainfall – Runoff Criteria

The rainfall intensities "i" used in the storm drainage shall be taken from the U.S. Weather Bureau "Rainfall Intensity – Duration – Frequency Curves" for the Hartford Rain gauge (see Appendix C). Other intensity charts may be used with the prior approval of the Town Engineer.

Time of concentration shall be derived for all storm drains constructed. Several valid criteria are n use. An acceptable criteria for time of concentration in a residential area is as follows: ten (10) minutes to gutter plus time to flow in gutter to first inlet plus time in the storm drains equals time of concentration. The minimum time of concentration under these regulations shall be five (5) minutes.

2. Runoff Coefficients

(Click Here)5-2

The following "n" values shall be used for solving the Manning formula:

RCP & PVC/ADS n = 0.012
CMP n = 0.024
n = 0.019 - paved invert
n = 0.015 - fully paved

Inlet Capacity

Inlets on roadway grades shall be designed to intercept storm runoff while containing the design flows within acceptable roadway flood limits. The vertical or horizontal constraint that creates the least ponding or flooding shall govern. The vertical constraint shall be one inch below the top of curb and the horizontal constraint shall be the gutter plus one-half (1/2) of the travel lane located closest to the gutter line.

The capacity of inlets located on continuous grades shall be determined by gutter flow analysis with the assumption that the water passing over the gate is intercepted. The analysis shall be performed utilizing the design aids provided in the Appendix C.

Inlets situated in roadway sag curves or other depressed areas shall be designed utilizing the method and design aid in Appendices (Hydraulic Capacity of Grate Inlet in a Sump from the "Drainage of Highway Pavements", HEC No.12, Department of Transportation, March, 1969). Inlets with grates and without curb opening shall be designed with a fifty (50) percent reduction in effective perimeter to provide for the possibility of debris disrupting the flow at the grate. The design of inlets with grates and cub openings shall utilize the entire perimeter.

Design Storm Criteria

All storm drainage facilities shall be designed based on the following storm return frequency criteria:

Residential Drainage Systems:
Storm Sewers and Minor Ditches – 10 year storm.
Major Ditches and Channels – 25 year storm.

Ditch classification will be determined by the Town Engineer.

Commercial Districts:
All Drainage Facilities – 25 year storm.

Industrial Parks:
All Drainage Facilities – 25 year storm.

All Detention Basins – 100 year storm.
Drywells – 25 year storm (except for one to three family residences which shall be designed for 10 year storm events)
Culverts & watercourses – 50 year storm.
Bridges & Box Culverts – 100 year storm.

Design of any structure located on a watercourse which is included in the Flood

Insurance Study for East Hartford shall be analyzed using the 100 year storm.

Detention Basins

Detention basins are facilities, which are utilized for the detention of storm water to reduce the peak discharge and release the stored water at an acceptable and controlled rate.

Detention basins shall be designed to drain completely. (i.e. no standing water)

Drainage analysis shall be made for the two (2), five (5), ten (10), twenty five (25) and one hundred (100) year storm utilizing the SCS TR-55 methodology. The rainfall intensities of the various events for the Hartford area are shown in the Appendix C.

Detention basins shall be deigned to accommodate the one hundred (100) year storm event. Relief may be granted from the one hundred (100) year storm design requirements for existing sites with the approval of the Town Engineer and provided that:

1. The physical constraints of site will not allow for construction of a basin for the one hundred (100) year storm event.

2. Any possible increase in runoff will not adversely impact adjacent properties and area upstream and downstream from the project.

3. Documentation shall be provided to substantiate any deviation from the one hundred (100) year storm design requirements.

Detention basins shall be designed to provide a minimum freeboard of one (1) foot from the 100 year storm elevation to the top of the basin berm.

The outlet structures shall be designed as to not exceed the predevelopment flows for the two (2), five (5), ten (10), twenty five (25), fifty (50), and one hundred (100) year storm events. Measures should be employed to prevent the clogging of the outlet structure.

Fencing may be required around the detention basin for public safety. An access gate shall be provided for maintenance purposes. The maintenance of all detention basins, which are required, will be the responsibility of the private property owner(s).

Detention basins shall be constructed as part of the first phase work and incorporate sedimentation and erosion controls to minimize the impacts of construction on adjacent watercourses.

Detention basins shall have a ten (10) foot wide access road to provide for maintenance vehicles into the basin itself. The access road shall have a maximum grade of ten (10) percent which may be on the upper perimeter of the basin and/or ramped to the bottom at a maximum grade of twelve and one-half (12.5) percent as approved by the Town Engineer.

The calculations for the detention pond shall provide information on the impacts of the outflow hydrograph from the detention basin on the existing drainage systems and/or

watercourse including a comparison of the times of the peak discharges to a location downstream of the proposed basin as determined by the Town Engineer.

The following information is to be provided for all detention basins:

1. Inflow hydrograph
2. Outflow hydrograph
3. Storage Volume
4. Outflow calculations
5. Flood Routing
6. Spillway/emergency outlet design
7. Measures and/or materials to be used to stabilize the basin.

Drywell Design

Drywell systems are facilities which utilize subsurface storage and/or percolation of storm water runoff.

The use of drywells as a method of storm water discharge must only be considered after all other methods of storm water discharge have been reviewed and found to be unacceptable by the Town Engineer. Drywell systems require constant maintenance to keep them effective, the designer shall design a system that will include maintenance reduction items.

Soil data must be submitted to ensure that the soil conditions will allow the installation of a drywell system.

The following information shall be provided:

1. Deep test pits

    a. Provide information on soil conditions and depths.
    b. Provide information on the ground water elevation
    c. Provide the elevation of mottling.
    d. Provide information on the location and the date of the test pits. The test pits shall be in the vicinity of and a minimum of two (2) feet deeper than the proposed drywell system. The engineering Division should be contacted a minimum of twenty four (24) hours prior to the test pits, so that a representative of the Division may be present during the test pits.

2. Permeability Information

    a. Permeability Information

(Click Here) 5-7

    b. Constant head permeability test

(Click Here) 5-8

c. Percolation test

A correct percolation test consists of three steps: 1. Presoaking the test hole, 2. Refilling and allowing the hole to saturate for thirty (30) to sixty (60) minutes under certain conditions and 3. Determining the minimum uniform percolation rate after saturation.

The required presoaking time will vary depending on the soil and its moisture content. All soils shall be presoaked by filling the test hole with twelve (12) inches of water. If the water seeps away in less than two (2) hours, the hole may be refilled to the twelve (12) inch depth and the percolation test begun. If any water remains in the hole after two (2) hours, it shall be refilled to the twelve (12) inch depth and be allowed to presoak for at least two (2) additional hors before the percolation test is begun. However, such extended presoaking shall not be required where it is determined that the soil contains no significant amount of swelling clays. This shall be determined by the Town Engineer. Any test hole which has continuously contained water for four (4) hours or longer shall be considered adequately presoaked.

It is not necessary to perform the percolation test immediately, although test performed at the end of the presoaking period yield the most accurate results. If more than thirty (30) hours have elapsed following initial presoaking, the test hole shall be presoaked again.

Following presoaking, the hole shall be refilled and allowed to percolate thirty (30) to sixty (60) minutes in order to fill the voids in the soil surrounding the test hole with water. The minimum uniform rate following saturation shall be used in determining the size of the drainage system. Readings taken prior to thirty (30) to sixty (60) minutes after refilling normally shall not be used calculating the minimum percolation rate. However, if after presoaking the refilled hole goes dry before thirty (30) minutes, the readings which have been taken may be used without a second refilling.

Percolation tests shall be made in a six (6) to twelve (12) inch diameter hole dug o the depth of the proposed drainage system. At locations where there appears to be two (2) or more soil strata of different texture or structure, each strata shall be tested separately with holes of comparable depths. In sizing of the system, only representative test results n the area and at the depth of the proposed system shall be used, but all percolation tests and observation pits which were made on the site shall be reported.

3. Drywell Design Criteria

No credit for storage will be given for any part of the system which is below the mottling elevation.

The maximum amount of Storage allowed for the voids within any stone layer placed around the drywell is thirty three (33) percent of the volume of the area occupied by the stone.

The drywell and the surrounding stone must be wrapped with filter fabric.

The drywell system shall have measures (I.E.: catch basin) incorporated which prevent sediment from entering the drywell which will affect the performance and/or life of the drywell.

An access manhole must be raised to grade to provide access for inspection and maintenance of the system.

An overflow connection to an existing drainage system shall be included except where an exception is granted by the Town Engineer.

The following information on the drywells must be provided:

1. Type & size of structure
2. The loading for which the unit was designed
3. Invert elevations of all pipes
4. Elevation which the drywell id to be set at
5. Construction details

The drywell shall be sized by the development of a hydrograph. Rational Method triangular hydrograph is an acceptable method for small sites. A minimum of two times the time of concentration shall be utilized for the back leg of a triangular hydrograph. The drywell system design should not include any credit for percolation. The percolation values are to be considered a factor of safety.

Drywell installations will require a building permit for the Department of Inspections and Permits. The design of the system will also be reviewed and approved by the Building Department.

Upgrading of existing drainage facilities

All design shall meet all of the applicable design criteria found within these regulations.

The following information shall be provided:

1. Drainage area maps to an appropriate scale.
2. Drainage calculations including the impacts on the upstream and downstream drainage
3. Systems and/or watercourses.
4. Provide a plan and profile which shall include all existing/proposed utility and drainage facilities.
5. Provide a maintenance & protection of traffic plan including a schedule of operations for any improvements on a Town of State road.

All plans shall receive approval from the utility companies and any other regulatory agencies prior to receiving final Engineering approval. Any redesign caused by other agencies shall be submitted to Engineering for approval.

All offsite drainage improvements must be installed, operational and approved by the Town Engineer prior to the commencement of on-site construction activities.

Motor Vehicle Service Facilities

This section has been provided for informational purpose only. The East Hartford Health Department and the Department of Environmental Protection should be contacted for any requirements of permits which may be required in addition to Town land use permits.

2. Runoff Coefficients

Weighted runoff coefficients shall be derived based on the following criteria:

Surface	Under 2% Flat	Rolling 2% to 10%	Hilly Over 10%
Pavement, Roofs, Walks	0.90	0.90	0.90
Gravel Pavement	0.50	0.55	0.60
Lawns	0.20	0.30	0.40
Side Slopes, Earth	0.60	0.60	0.60
Side Slopes, Grass	0.30	0.30	0.30
Cultivated Land, Clay & Loam	0.50	0.55	0.60
Cultivated Land, Sand & Gravel	0.25	0.30	0.35
Industrial Areas	0.70	0.80	0.90
Parks & Cemeteries	0.20	0.30	0.35
Woodlands & Forests	0.10	0.15	0.20
Meadows & Pasture Land	0.25	0.30	0.35

B. TR-55

The Soil Conservation Service - "Urban Hydrology for Small Watersheds" Publication 55 may be used to determine peak discharge and hydrographs.

A twenty four (24) hour duration type III distribution storm event shall be analyzed.

C. FLOOD HYDROGRAPH

Design discharges for major channels and brooks may, with the concurrence of the Town Engineer, be based on a flood hydrograph or flood flow formula type of analysis.

D. SYSTEM DESIGN

Hydraulic designs shall be based on the Manning Formula:

$$Q = \frac{1.486 r^{(2/3)} s^{(1/2)} A}{n}$$

n = roughness coefficient

r = hydraulic radius

s = slope

A = wetted area of conduit

2. Permeability Information

a) Falling head permeability Test.

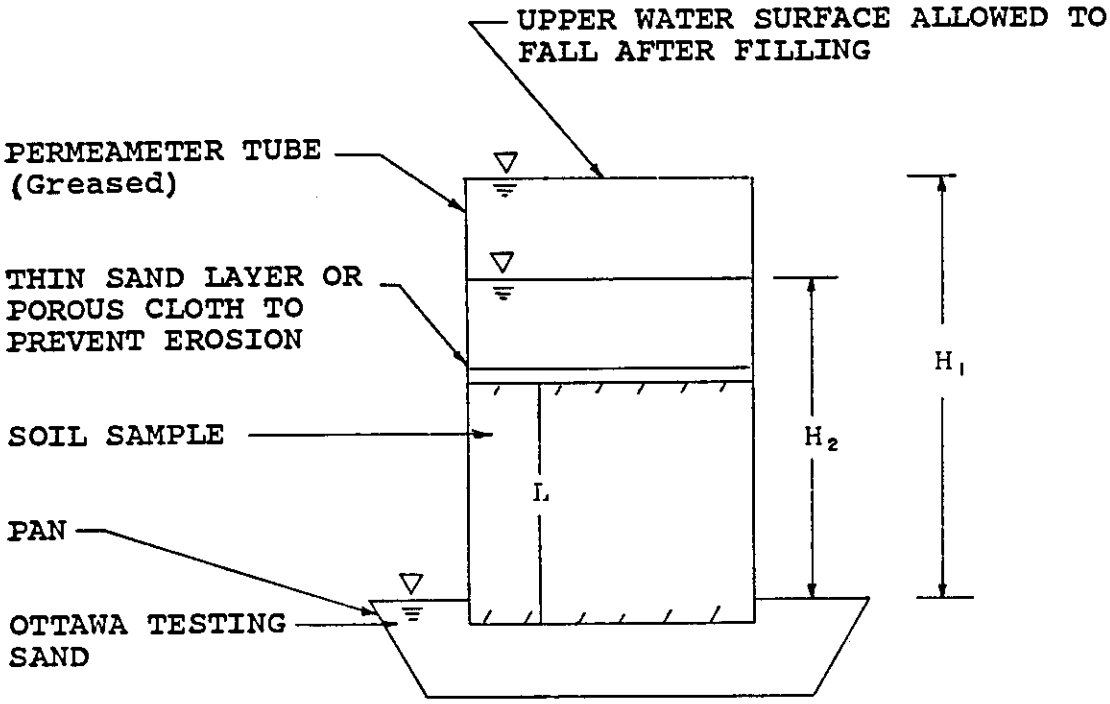

Falling Head Permeability Test

In the falling head method, the permeability is calculated by measuring the rate at which the water level above the sample falls.
The following equation is used:

$$K = \frac{(H_1 - H_2) \times L}{t \times \frac{(H_1 + H_2)}{2}}$$

Where:

- H = Hydraulic head at start of test, in inches.
- H = Hydraulic head at end of test, in inches.
- L = Length of sample, in inches.
- t = Elapsed time, in minutes.
- K = Sample permeability, in inches/min. To convert to feet per day multiply the result by 120.

$$\frac{\text{inches}}{\text{minute}} \times \frac{1 \text{ ft.}}{12 \text{ inches}} \times \frac{1440 \text{ minutes}}{\text{day}}$$

b) Constant head permeability Test.

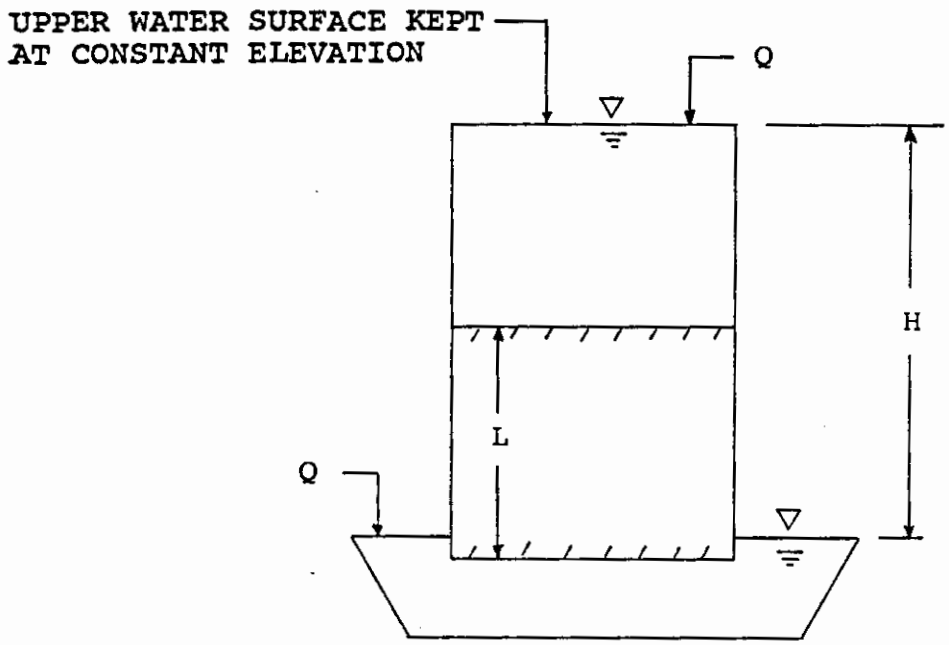

Constant Head Permeability Test

In the constant head method, the water surface is kept constant by adding water from a reservoir with an adjustable discharge. The permeability is calculated by measuring the amount of water which overflows from the receiving pan during a given time.

The following equation is used:

$$K = \frac{Q}{\frac{H}{L} \times A}$$

Where:

Q = Rate of flow, in cubic inches/min.
H = Hydraulic head, in inches.
L = Length of sample, in inches.
A = Cross section area of sample, in square inches. This can be converted to feet per day by multiplying by 120.

SECTION 6

EROSION AND SEDMENT CONTROL

In order to control erosion and pollution from excess sedimentation within the parcel, the developer/builder shall adhere to the standards and practices as set forth in the "Connecticut Guidelines for Soil Erosion and Sediment Control" dated January, 1985, as amended.

Erosion and sedimentation control measures, as required by various Commissions, and the Engineering Division shall be installed and/or employed to prevent soil erosion and resultant sedimentation, particularly as such sedimentation might contaminate rivers, streams, wetlands, ponds, or create a nuisance to abutting property owners.

Required sedimentation and erosion control measures shall be installed prior to the initiation of any construction activities, and must be maintained or replaced, as necessary, until disturbed areas are stabilized. The Engineering Division may modify sedimentation and erosion control requirements, particularly when extraordinary climatic or weather conditions should dictate such modifications.

When disturbance is greater than one-half acre there shall be a separate plan as per Public Act 83-388 section 5, showing proper measures to control erosion and reduce sedimentation. For private sites where the disturbance is less than one half acre, the erosion control measures and details shall be shown on the site plan.

A. Such Erosion and Sedimentation Control Plan shall consist of:

1. Location of areas to be stripped of vegetation and other exposed or unprotected areas.

2. A schedule of operations to include starting and completion dates for major development phases, such as land clearing and grading, street, sidewalk, and storm drainage installation, etc.

3. Seeding, sodding, or revegetation plans and specification for all unprotected or unvegetated areas.

4. Location, design and timing of structural sediment control measures such as diversions, waterways, grade stabilization structures, debris basins, construction entrances, and the like.

5. General information relating to the implementation and maintenance of the sediment control measure.

6. Location of ant and all soil stockpile areas.

Excavation, Fills and Grading

Cut and fill slopes not be steeper than 2:1 unless stabilized by a retaining wall or cribbing except as approved by the Commission and the Engineering Division under special conditions.

Adequate provision shall be made to prevent surface water from damaging the cut face of excavations on sloping surfaces or fills.

Fill shall be placed and compacted so as to minimize sliding or erosion of soil.

Grading shall not be done in such a way so as to divert water onto the property of another landowner without the expressed written consent of that landowner.

Fills shall not encroach on natural watercourses or constructed channels.

During grading operations, necessary measures for dust control must be exercised.

Construction equipment shall only cross a watercourse at right angles to the flow during the construction period or by other methods as approved by the Commission.

Implementation Procedures

In submitting the Erosion and Sedimentation Control Plan, the applicant shall comply with the following:

1. The plan should be designed so as to create the least erosion potential.

2. Wherever feasible, natural vegetation should be retained and protected.

3. Only the smallest practical area of land should be exposed at any on time during development.

4. When land is exposed during development, the exposure should be kept to the shortest practical period of time.

5. Where necessary temporary vegetation and/or mulching should be used to protect areas exposed during development.

6. Sediment basins (debris basins, desilting basins, or silt basins), should be installed and maintained to remove sediment from run-off waters and from land during development.

7. Provisions should be made to effectively accommodate the increased run-off caused by changed soils and surface conditions during and after development. Computations for run-off shall be in accordance with those provided in this manual.

D. Conditions Relating to Erosion Control

Measures to be taken to control erosion and sedimentation, if required, shall be described and provided for in Plan Approval.

Before any groundwork can begin within an approved site plan, or other work disturbing more than on-half acre of land all erosion control bonds must be posted with the Town of East Hartford, Office of Development.

Besides the posting of the erosion control bond, no work will be allowed to begin until such time as all erosion control devices have been installed and approved according to the approved erosion control plan.

SECTION 7

BONDING OF SITE PLAN MODIFICATIONS

All site plan applications submitted before the Inland Wetlands – Environment Commission and the Planning and Zoning Commission may be subject to a performance bond. As the first site plan is received, it will be stamped, dated and signed. A copy will be given to the applicant, a second will be kept on file in the office of Development, and a third kept on file in the Engineering Division. Any modifications, thereafter, to the site plan, are subject to posting of a performance bond. The performance bond shall be posted by the developer to insure that all modifications of said site plan are made. In the event that modifications are not completed, the Town may install such modifications at the expense of the developer.

VOID - SITE MODIFICATION BOND NO LONGER REQUIRED

A. Bond Requirements

The applicant shall, within one year of the date of approval of the final Site Plan by the Commission, file with the Town Planner a surety bond in favor of the Town executed by a surety company authorized to issue such bonds under the laws of the State of Connecticut. No building permit shall be issued on any modified site plan until the bond has been accepted by Corporation Counsel and the Director of Finance. Said bond shall be in such amount and contain such conditions as the Commission may require. The bond shall not be released until the Commission, upon certification by the Town Engineer, having determined that all of the modifications have been completed. The Commission may, in its discretion, require the posting by the developer of a cash bond in lieu of a surety bond. Said cash bond shall be issued in the form of a Cashier Check or by Passbook Savings Account made in the name of "Town of East Hartford". Interest on such cash bond, if an interest bearing account, shall accrue to the developer, but shall not be payable until performance has been completed in accordance with the provisions of the Regulations. No other forms of such bonds will be accepted. The applicant shall execute a bonding agreement, the form of which is to be approved by the Corporation Counsel.

B. Bond Reduction Procedure

The Site Plan Developer may request a reduction by letter to the Chairman of the Planning and Zoning Commission, who shall refer the matter to the Town Engineer, who will, after an inspection, make a recommendation to the Commission. The Town Engineer has authorization to make recommendations to the Commission on Bond Reductions without a request from the Site Plan Developer and the Commission may reduce said Bond. There may be no more than two (2) bond reductions per calendar year on each approved Site Plan.

The Town Engineer in his sole discretion is authorized to make minor field adjustments to the approved site plan, provided that such adjustments are not in conflict with the approved site plan and that those adjustments are in conformance with the Zoning Regulations.

SECTION 8

RECORD DRAWINGS

Prior to the Final acceptance of any subdivision, the developer shall submit one (1) mylar drawing (s) of all as-built public improvements to the Engineering Division for review and information. The developer shall also submit copies of all warranty and easement deeds for parcels of land to be deeded to the Town of East Hartford for review and approval.

Prior to final acceptance and issuance of a C.O. (Certificate of Occupancy) the developer shall submit four (4) blue line prints of all as-built improvement to the Building Department for review, information and distribution. Mylar copies are required for any off-site improvements.

The Planning & Zoning Commission is under no obligation to approve any variations to an approved subdivision or site plan. The Commission may refuse any such variations and require that all improvements that fail to conform to the approval, site plan, or the subdivision plan will be reconstructed to comply with the original plans, as approved by the Planning and Zoning Commission, prior to the release of any bonds.

The following general information is to be provided on the final drawings. The Town reserves the right to request additional information beyond what is listed below.

A. Show all Geometry pertaining to straight lines, the perimeter boundary of the development, internal property or lot lines, and easement lines. Datum is to be the same as called for on the approved subdivision and/or site plan.

B. Building setback lines.

C. As-built locations or sidewalks, handicap ramps, and driveway openings.

D. As-built locations of all drainage structures (i.e. catch basins, manholes, headwalls, flared end) together with top of frame elevations, invert elevations, size of pipes, top of headwall elevations and flared end elevations. Revised drainage design calculations based on as-built modifications must be submitted if directed by the Town Engineer.

E. As-built locations of sanitary manholes, including top of frame elevations, size of pipe and invert elevation.

F. As-built locations of all street light poles with numbers designated by the utility company.

G. As-built locations of underground utilities (i.e. water, electric, telephone, cable TV, gas) as well as all above ground utility transformer pads, manholes, junction boxes.

H. All monumentation set and found for project perimeter, streetline, lot corners and angle points, and easements. The above locations are to be certified to an A-2 Standard of Accuracy by a licensed professional Land Surveyor in the State of Connecticut.

I. Semi-permanent benchmarks shall be set at all roadway intersections, and along newly constructed roadways. Maximum distance between benchmarks shall not exceed six hundred (600) feet with a minimum of three (3) benchmarks. Datum is to be the current NGVD datum.

J. All existing foundations with dimensions off of property line, are to be certified to A-2 standard of accuracy. No plus or minus dimensions are permitted. Provide finished floor elevation and elevations at all entrance and exit doors.

K. Scale of drawings to be in accordance with the original site plan and subdivision plan submission. Maximum sizes of sheet two (2) feet by three (3) feet.

L. Title block indicating "As-Built" or "Record Drawing" with date.

M. Paper prints and mylars are to be stamped (ink & embossed seal and et signature) by the Licensed professional Land Surveyor in the State of Connecticut responsible for their production.

The following information is to be provided on the profile sheets:

A. Scale of profiles to be in accordance with original subdivision plan submission.

B. Existing and finished roadway center line profile with final roadway center line grade at every 50 foot interval including elevations at all low, high and intersection points.

C. The following underground utilities (water sanitary sewer, storm sewer, gas, electricity, telephone, Cable TV) along with pipe sizes and material, top of frame elevations, flow lines, and slope of pipes shall be shown on the "As-Built Profile".

SECTION 9

DEVELOPMENT WITHIN A FLOOD HAZARD ZONE

Section 600 of the East Hartford Zoning Regulations contains certain information which govern development in a flood hazard zone.

The following information shall be provided in addition to any requirements found in the Zoning Regulations:

1. Elevation and limits of the one hundred (100) year flood zone (elevations are to be based on the current NGVD datum).

2. The limits of inland wetlands and buffer zones.

3. Existing and proposed grading.

4. Elevation of the lowest floor of any structure. The lowest floor elevation should be a minimum of one (1) foot above the one hundred (100) year flood zone elevation.

5. Limits of construction.

6. Quantities of cuts and fills within the flood zone, flood way, etc.

7. Provide sections and calculations for excavation within the flood zones.

8. Provide evidence of receiving all necessary State and Federal permits.

Compensatory storage at the same elevation must be provided for any fill placed within a flood hazard zone. Information shall be provided on the affects of the development on the flood carting capacity of the flood zone.

TOWN OF EAST HARTFORD
DESIGN MANUAL
Appendices

APPENDIX A

Table of Contents

General Note	A – 1
Site Plan Approval Block	A – 1
Final Subdivision Approval Block	A – 1
Temporary Patch Treatment	A – 2
Permanent Patch Treatment	A – 3 to A – 4

THE FOLLOWING NOTE SHALL BE ADDED TO THE FIRST SHEET OF ANY SUBDIVISION OR SITE PLAN.

THE APPROPRIATE APPROVAL BLOCK SHALL BE ADDEO TO ALL SHEETS OF THE SUBMITTAL.

ALL APPROVAL BLOCKS AND INSPECTION NOTES SHALL CONFORM TO THE FOLLOWING:

NOTE:
The developer shall notify The Town of East Hartford Engineering Division 24 hours prior to beginning any storm drainage, roadway preparation, paving, sidewalk, curbing, street line monumentation, property corner pins, etc., to schedule inspections. The Division can be reached between 8:30 A.M. - 4:30 P.M. at 291-7380.

TOWN OF EAST HARTFORD
PLANNING AND ZONING COMMISSION
SITE PLAN CERTIFICATE
OF APPROVAL

APPROVAL DATE _____

EXPIRATION DATE _____

_____ CHAIRMAN

TOWN OF EAST HARTFORD
PLANNING AND ZONING COMMISSION
FINAL SUBDIVISION APPROVAL

APPROVAL DATE _____

WORK MUST COMMENCE BY _____

EXPIRATION DATE _____

_____ CHAIRMAN

TOWN OF EAST HARTFORD

TEMPORARY PATCH TREATMENT

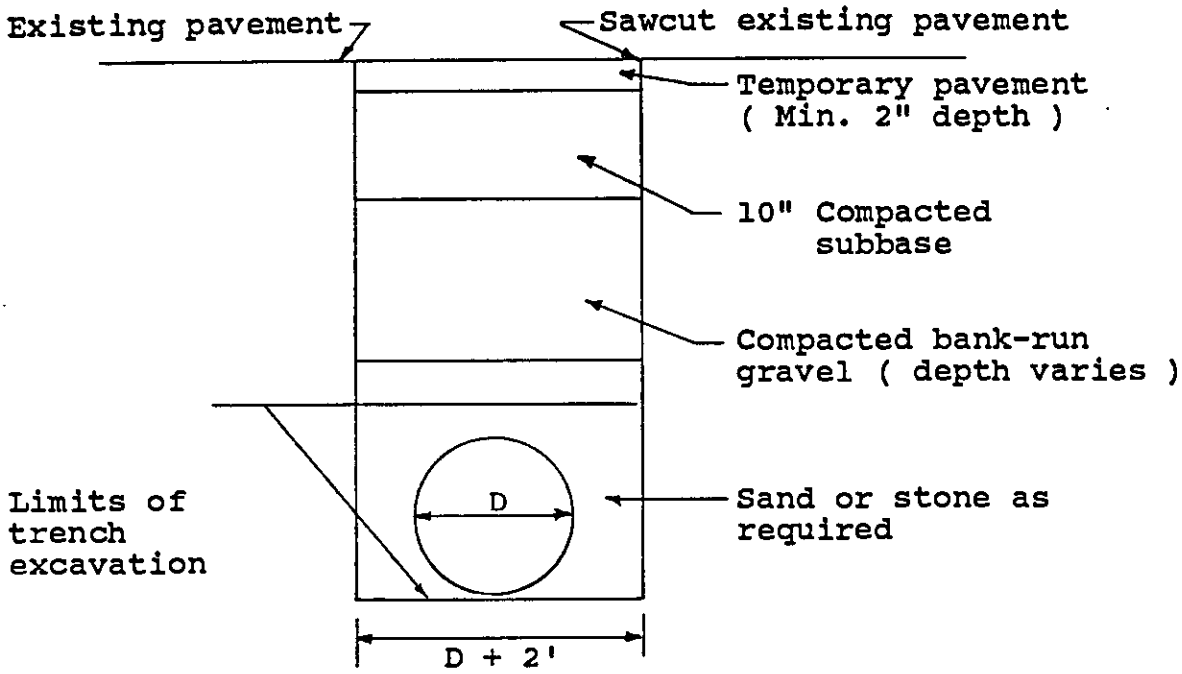

NOTES:

1. Pavement - temporary hot mix bituminous concrete pavement shall be placed with a minimum thickness of two (2) inches within twenty four (24) hours of the excavation. No excavation will be allowed on Friday unless it is to be paved by the end of the work day. <u>No cold patch will be allowed for any temporary repair.</u>

2. Subbase - the excavated materials will be acceptable for use as subbase material, if approved by the Town Inspector. If the material is unacceptable, ten (10) inches of processed aggregate stone base compacted in two equal lifts will be required.

3. <u>No permits will be issued during the period that the bituminous batch plants are closed except for emergency repairs.</u>

4. Steel Plates to temporarily cover excavations, may be used if approved by the Town Inspector. Plates must be anchored securely to the surrounding pavement and ramped with bituminous concrete. <u>No plates will be allowed between November 15 and April 1</u>.

TOWN OF EAST HARTFORD
PERMANENT PATCH TREATMENT

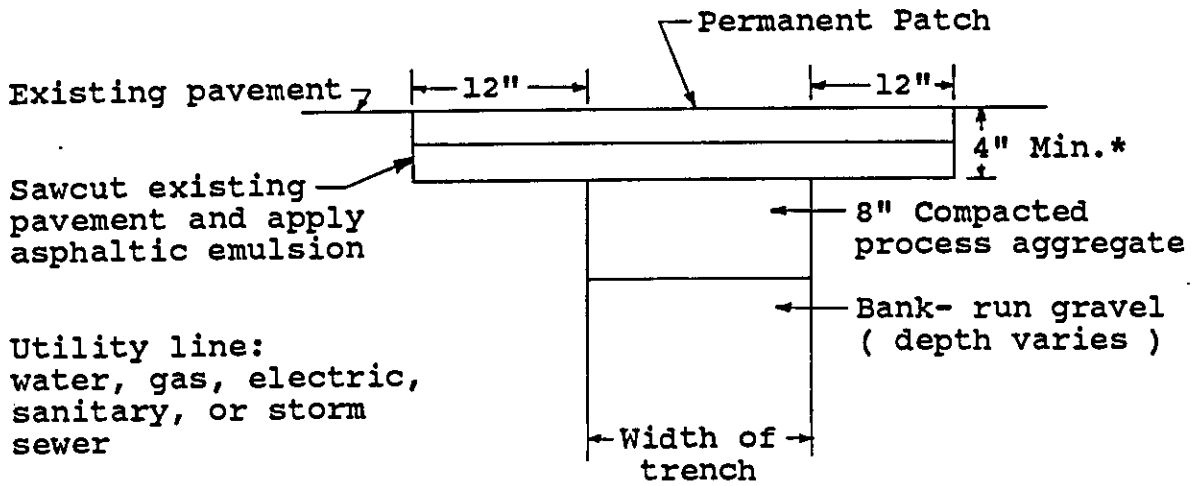

Permanent Patch

the temporary patch shall be removed, the existing pavement cut back a minimum of twelve (12) inches or as directed from the trench to make a neat clean square joint which will overlap the original subgrade.

A minimum uniform four (4) inch depth shall be excavated, care must be taken to remove all large stones and unsuitable material. The area shall be thoroughly compacted. An asphaltic emulsion, conforming to requirements of AASHTO M140, grade MS-2, shall be applied in the following method:

1. The emulsion shall be applied to the clean, dry edges of the existing pavement prior to the placing of the first course of bituminous concrete.
2. After the first course of bituminous concrete has been placed and compacted, another application of emulsion shall be applied to the edges of the patch and the existing pavement. This step shall be repeated for each lift required to bring the patch up to the level of the existing pavement.
3. A final application of emulsion shall be applied to the joint between the patch and the existing pavement surface. The emulsion shall be applied so that approximately two inches and four inches are on the existing pavement and patch respectively.

A hot bituminous concrete mix (class II - D.O.T. specs.) shall be placed in two (2) inch (rolled) lifts. The final lift shall be even with the existing pavement and cross rolled in addition to the normal rolling.

* NOTE: The four (4) inch depth is the minimum depth, if the

original pavement is thicker than four (4) inches, the minimum depth shall be increased to the depth of the existing pavement. Example: nine (9) inch roadway, would require a nine (9) inch permanent patch.

PENALTY

Failure of the permittee to comply with the above regulations will make him subject to the suspension of any further permits in the Town of East Hartford. If the completed work is unsatisfactory to the Town Engineer and/or the Director of Public Works, the Contractor shall be notified by registered mail, allowing him five (5) days to correct such pavement cut. If the pavement cut is not repaired, the Town of East Hartford will make the necessary repairs and bill the Contractor for the cost of the same.

TOWN OF EAST HARTFORD
DESIGN MANNUAL

APPENDIX B

Standard Details`

Table of Contents

Minor Street	B – 1
Collector Street	B – 2
Industrial Street	B – 3
Cul – De – Sac	B – 4
Underground Utility Locations	B – 5
Curbing	B – 6
Sidewalk	B – 7
Sidewalk Ramps	B – 8
Pavement	B – 9
Dumpster	B – 10
Monumentation	B – 11
Driveways	B – 12

DRAINAGE DETAILS

Type "C" Catch Basin	B – 13
Type "C-L" Catch Basin	B – 14
Transitional Catch Basin Slab & Debris Trap	B – 15
Steel Frame & Grate for Catch Basins	B – 16
Masonry Manhole	B – 17
Precast Manhole	B – 18
Sedimentation Structure	B – 19
Standard Endwall	B – 20
Wing Type Endwall	B – 21
Reinforced Concrete Pipe Flared End Section	B – 22
Ditches & Channel Slope Protection	B – 23
Rip Rap Plunge Pool	B – 24
Underdrain	B – 25
Trench	B – 26
Typical Detention Basin Outlet Structure	B – 27
Typical Detention Basin Dam	B – 28
Drywell	B – 29
Oil & Water Separator	B – 30

EROSION CONTROL

Haybales	B – 31
Silt Fence	B – 32
Construction Entrance	B – 33

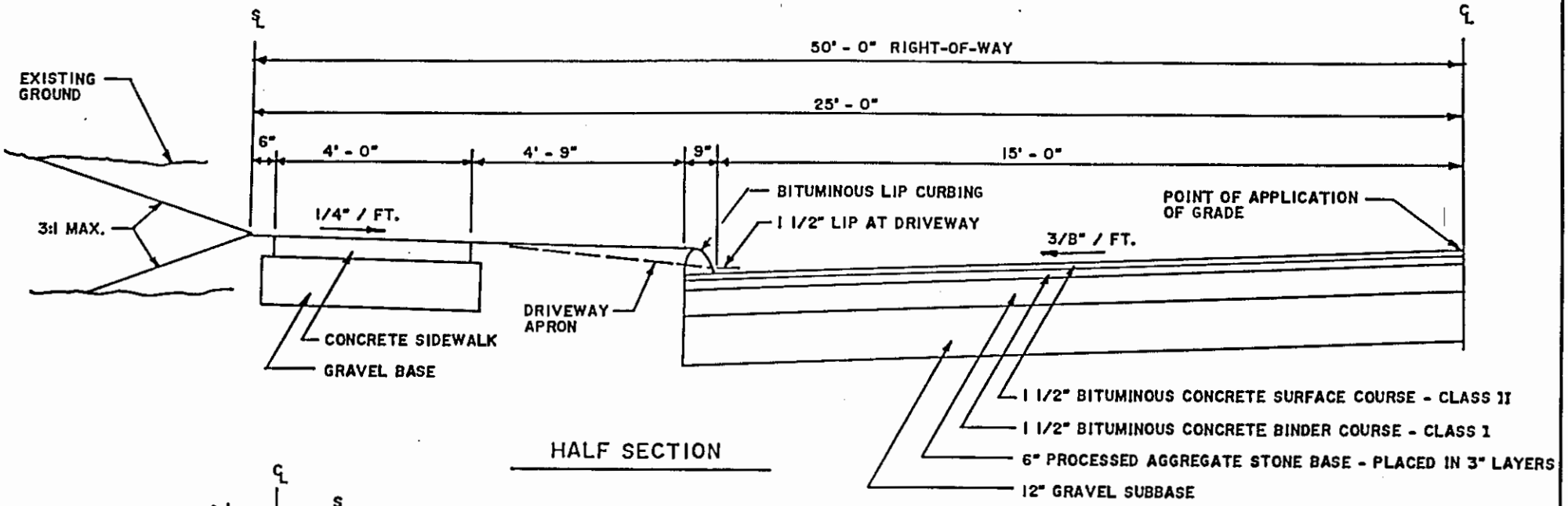

HALF SECTION

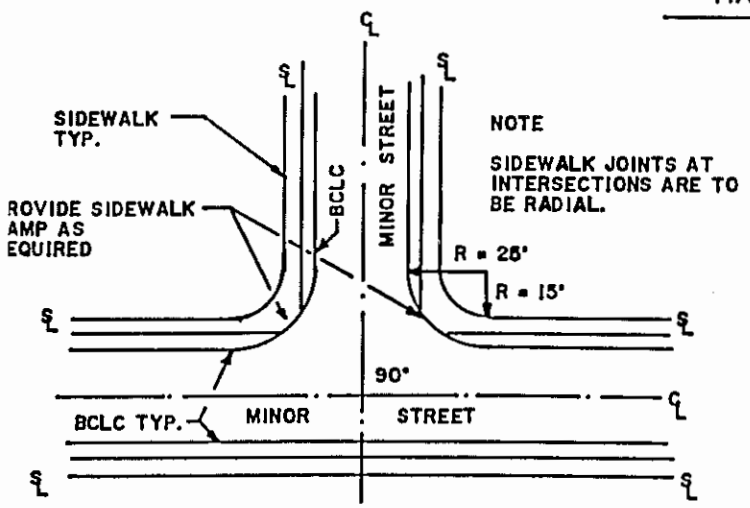

TYPICAL INTERSECTION

NOTE

SIDEWALK JOINTS AT INTERSECTIONS ARE TO BE RADIAL.

DESIGN CRITERIA

DESIGN SPEED	30 MPH
STOPPING SIGHT DISTANCE	200 FEET (MINIMUM)
MAXIMUM GRADE	8%
MINIMUM GRADE	0.5%
MINIMUM ℄ RADIUS	200 FEET

NOTE

IF BINDER COURSE IS LEFT AS A TOP COURSE FOR AN EXTENDED PERIOD A TACK COAT OF BITUMINOUS MATERIAL SHALL BE APPLIED PRIOR TO LAYING THE BITUMINOUS CONCRETE SURFACE COURSE.

NO.	DESCRIPTION	DATE	APPROVE

REVISIONS

TOWN OF EAST HARTFORD
STANDARD DETAIL

MINOR STREET
(RESIDENTIAL)

DATE: JUNE 1993

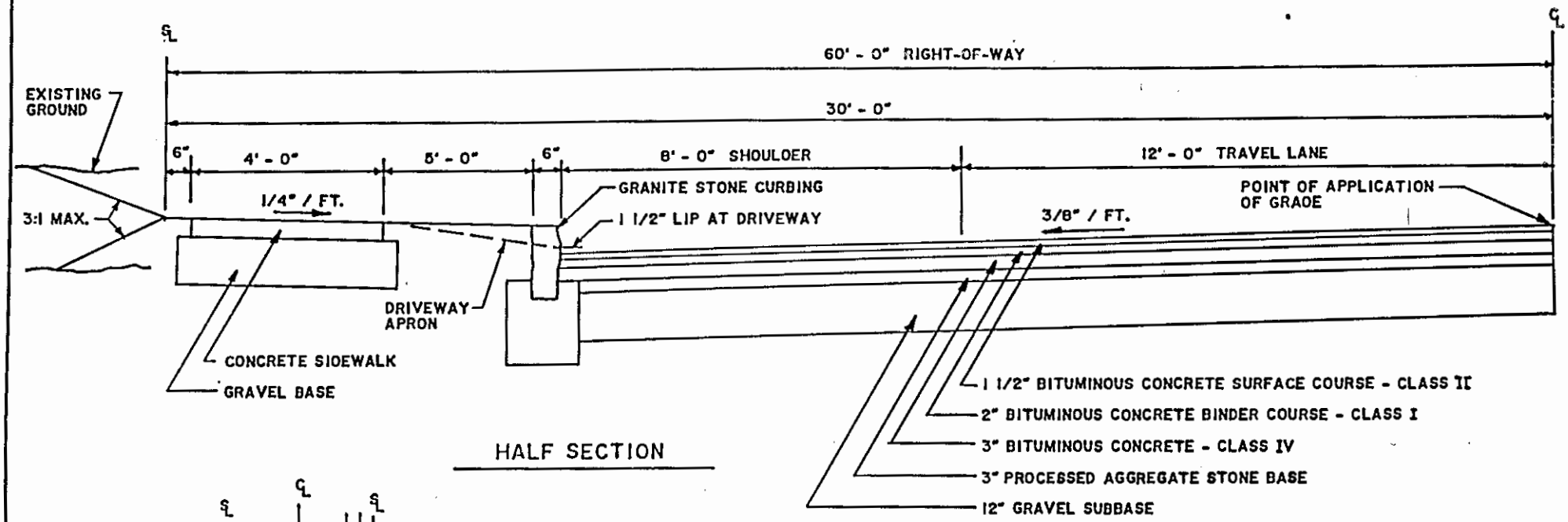

HALF SECTION

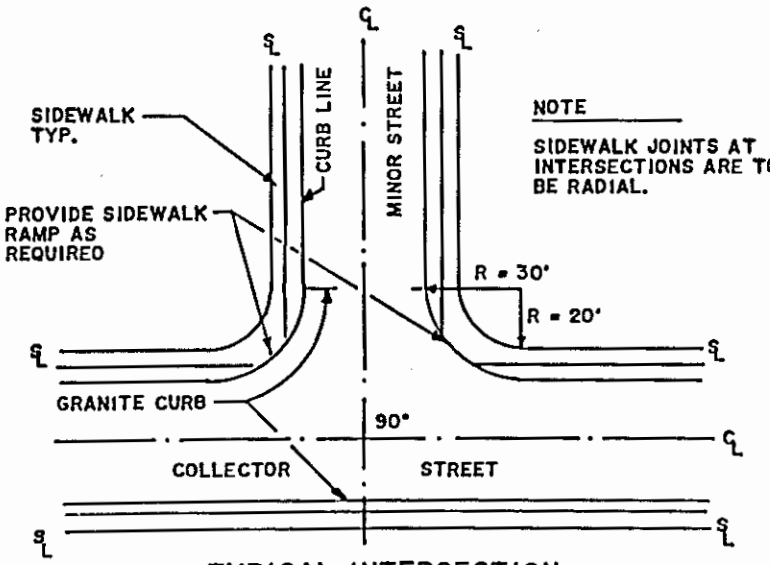

TYPICAL INTERSECTION

NOTE

SIDEWALK JOINTS AT INTERSECTIONS ARE TO BE RADIAL.

NOTE

IF BINDER COURSE IS LEFT AS A TOP COURSE FOR AN EXTENDED PERIOD A TACK COAT OF BITUMINOUS MATERIAL SHALL BE APPLIED PRIOR TO LAYING THE BITUMINOUS CONCRETE SURFACE COURSE.

DESIGN CRITERIA

DESIGN SPEED	45 MPH
STOPPING SIGHT DISTANCE	300 FEET (MINIMUM)
MAXIMUM GRADE	6%
MINIMUM GRADE	0.5%
MINIMUM RADIUS	500 FEET

NO.	DESCRIPTION	DATE	APPROVE
	REVISION		

TOWN OF EAST HARTFORD
STANDARD DETAIL

COLLECTOR STREET

DATE: JUNE 1993

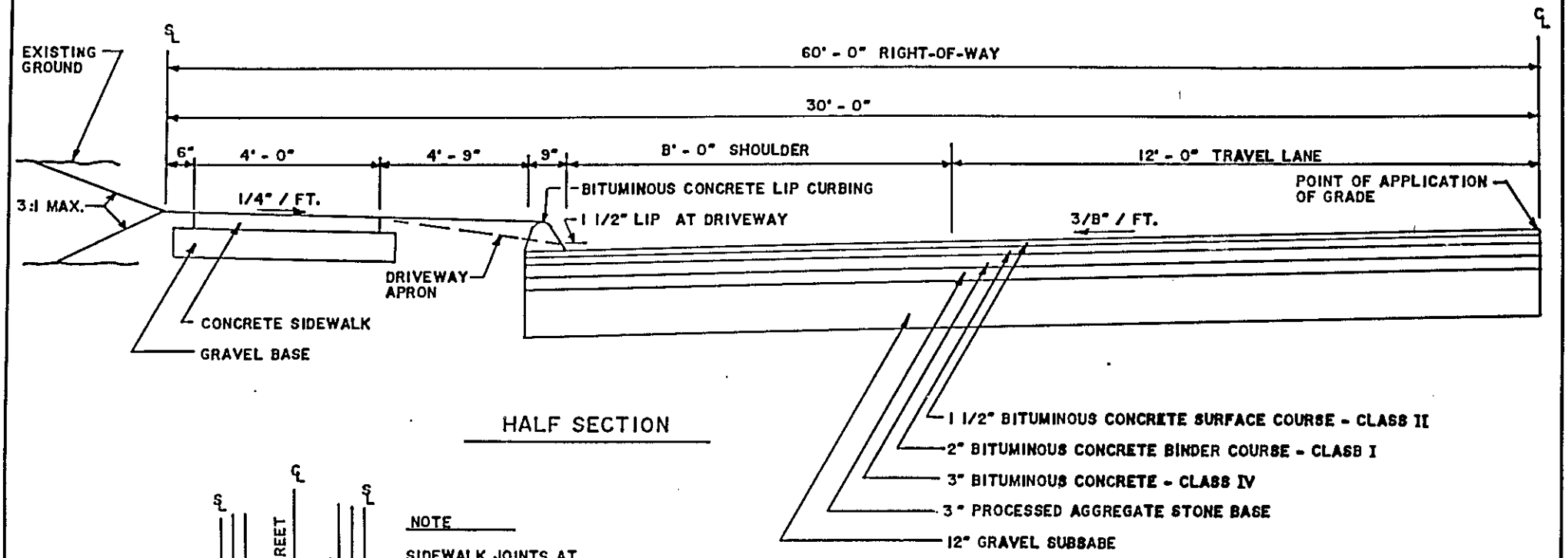

HALF SECTION

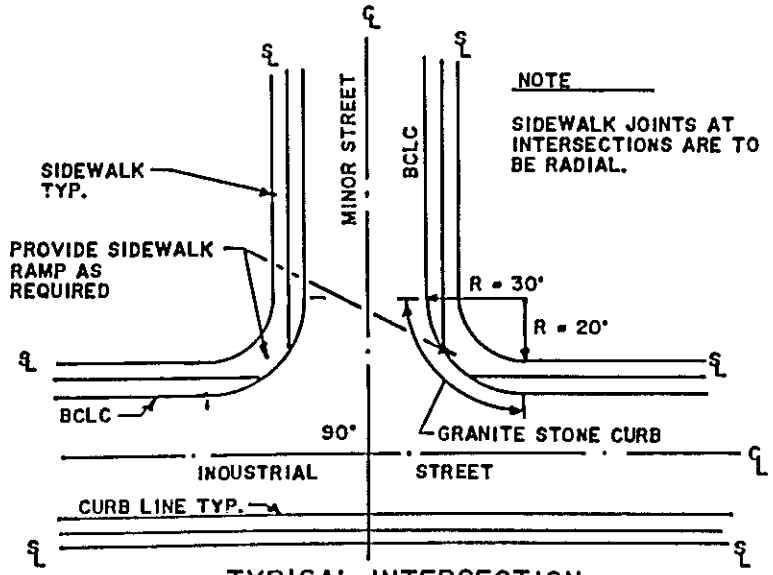

TYPICAL INTERSECTION DETAIL

NOTE

SIDEWALK JOINTS AT INTERSECTIONS ARE TO BE RADIAL.

DESIGN CRITERIA

DESIGN SPEED	30 MPH
STOPPING SIGHT DISTANCE	200 FEET (MINIMUM)
MAXIMUM GRADE	8 %
MINIMUM GRADE	0.5 %
MINIMUM ℄ RADIUS	200 FEET

NOTE

IF BINDER COURSE IS LEFT AS A TOP COURSE FOR AN EXTENDED PERIOD A TACK COAT OF BITUMINOUS MATERIAL SHALL BE APPLIED PRIOR TO LAYING THE BITUMINOUS CONCRETE SURFACE COURSE.

NO.	DESCRIPTION	DATE	APPROVE

REVISIONS

TOWN OF EAST HARTFORD
STANDARD DETAIL

INDUSTRIAL STREET

DATE: JUNE 1993

B-W

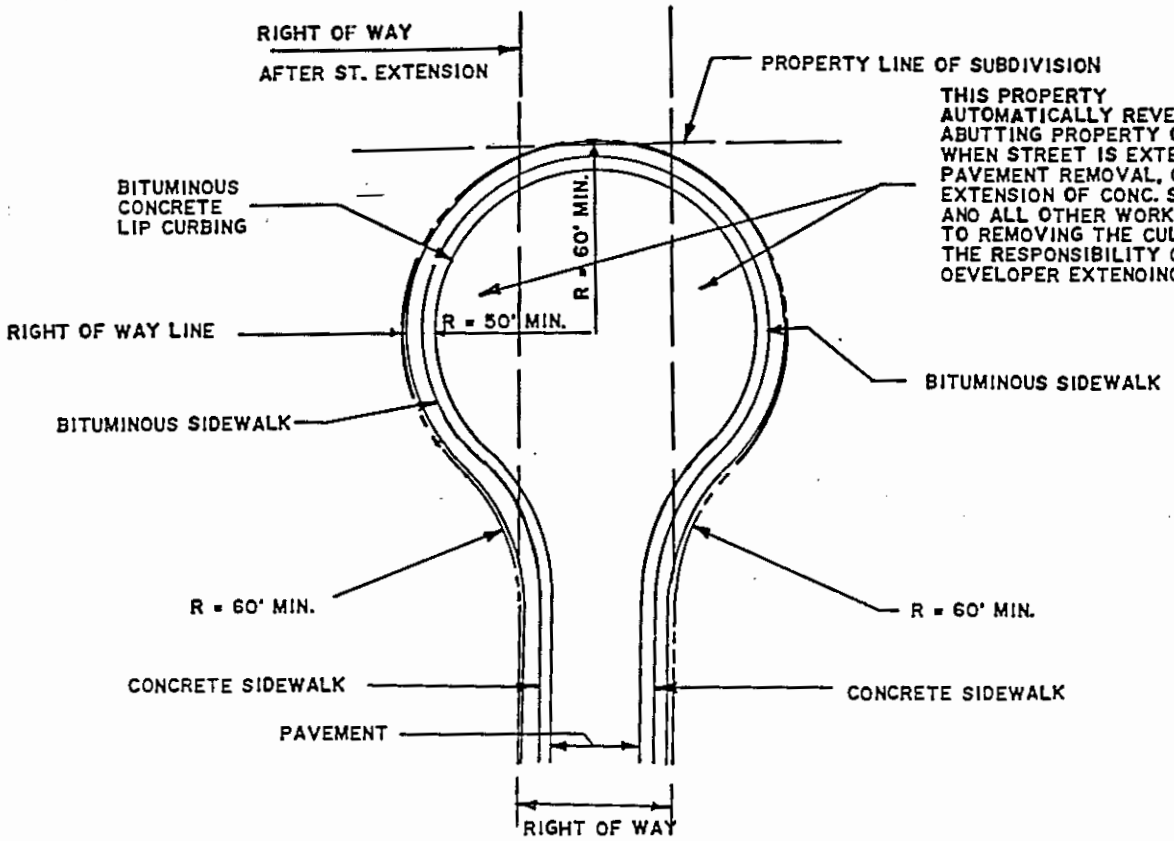

TEMPORARY CUL-DE-SAC

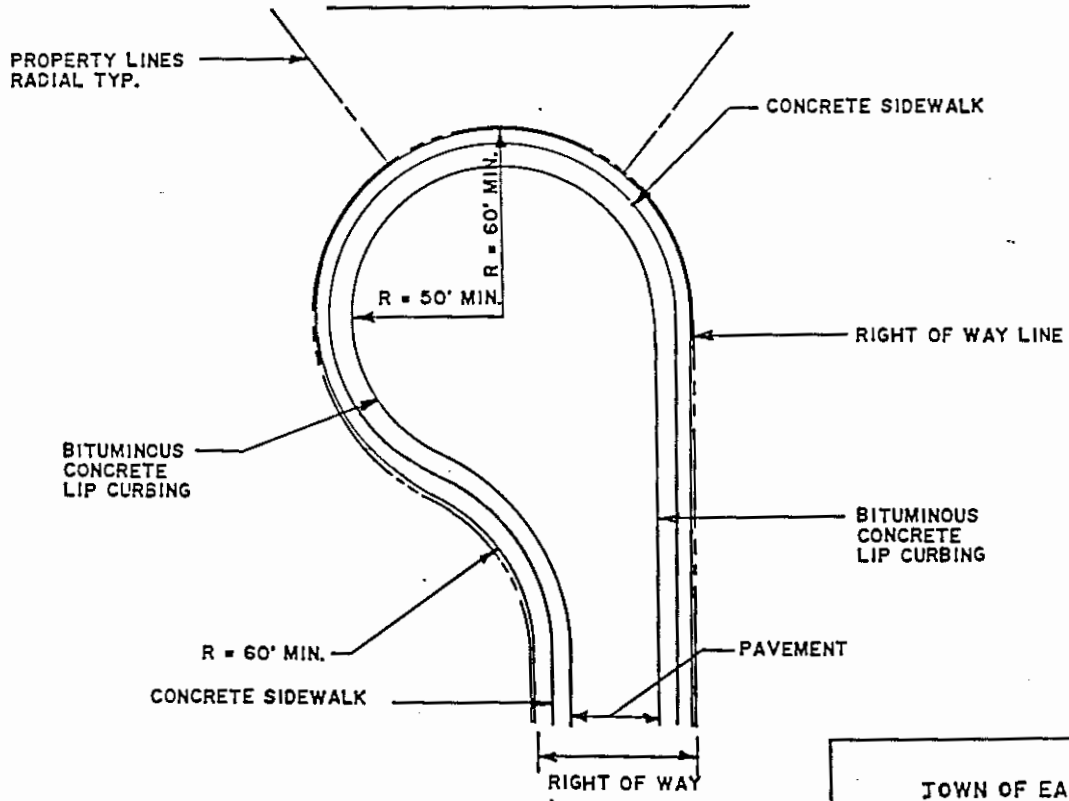

PERMANENT CUL-DE-SAC

NO.	DESCRIPTION	DATE	APPROVE

REVISIONS

TOWN OF EAST HARTFORD
STANDARD DETAIL

CUL - DE - SAC

DATE: JUNE 1993

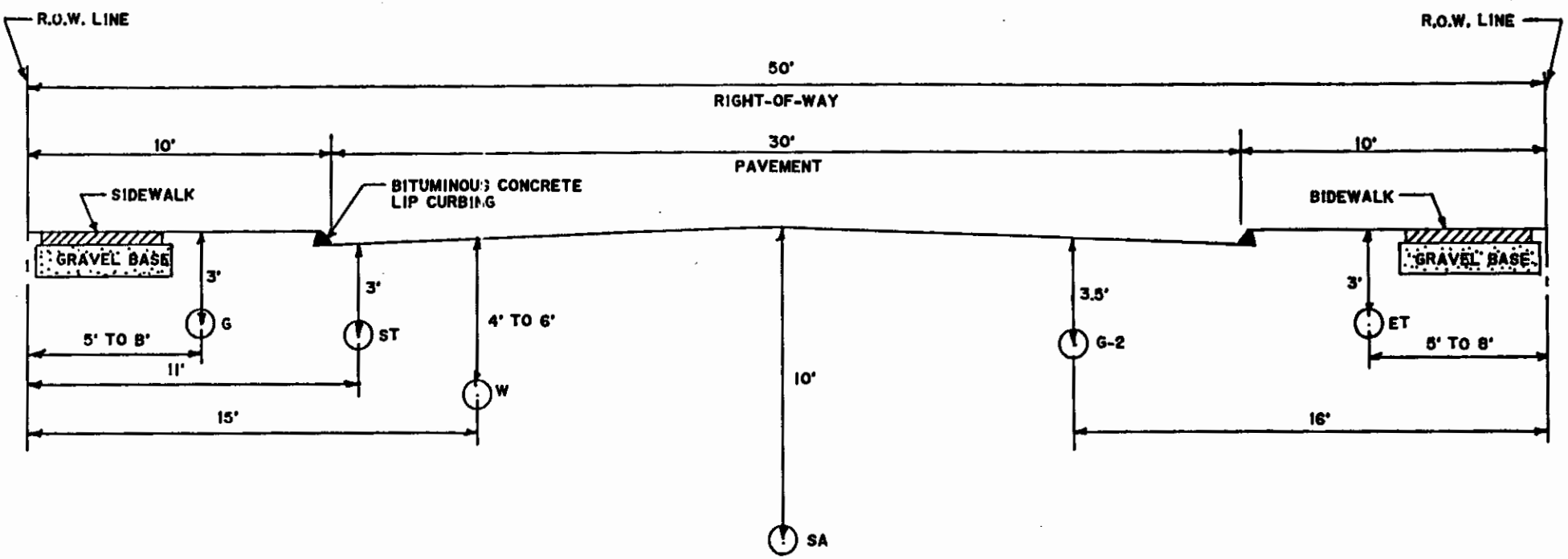

ALL DIMENSIONS FOR BURIAL OF UTILITIES ARE MINIMUMS.

SA = SANITARY SEWER - CENTER OF R.O.W.

G = GAS MAIN - SOUTH & EAST SIDE OF R.O.W.

G-2 = GAS MAIN - NORTH & WEST SIDE OF R.O.W.

ST = STORM SEWER - NORTH & WEST SIDE OF R.O.W.

W = WATER MAIN - NORTH & WEST SIOE OF R.O.W.

E = ELECTRIC CABLE - EITHER SIDE OF R.O.W.

T = TELEPHONE CABLE - EITHER SIDE OF R.O.W.

NO.	DESCRIPTION	DATE	APPROVE

REVISIONS

TOWN OF EAST HARTFORD
STANDARD DETAIL

UNDERGROUND UTILITY LOCATIONS

DATE: JUNE 1993

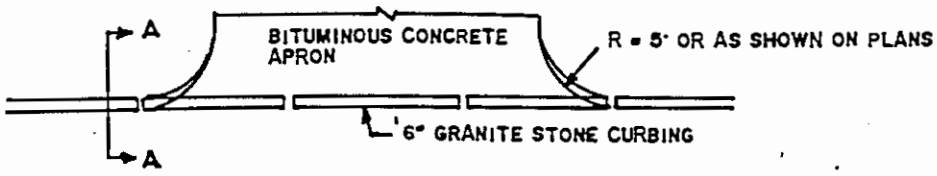

CURB TREATMENT AT DRIVEWAY

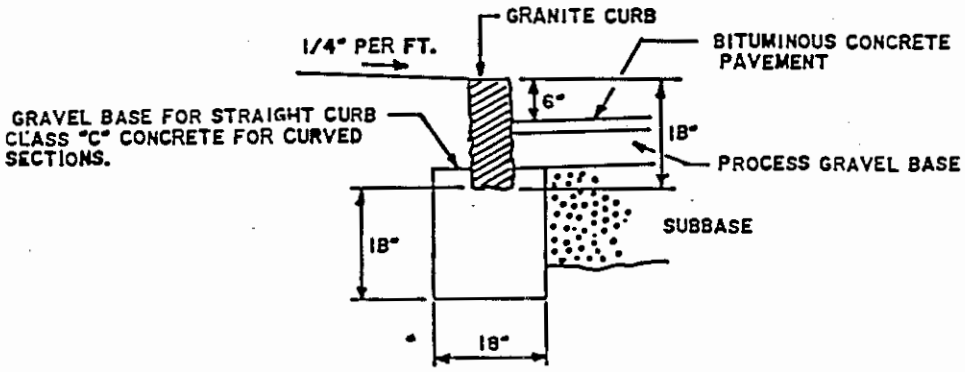

SECTION A - A

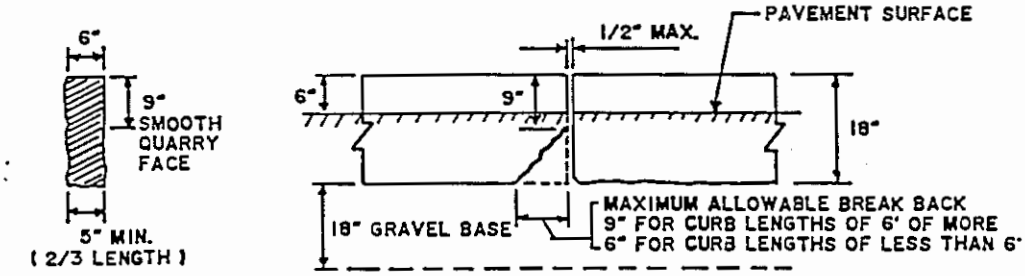

GRANITE STONE CURBING

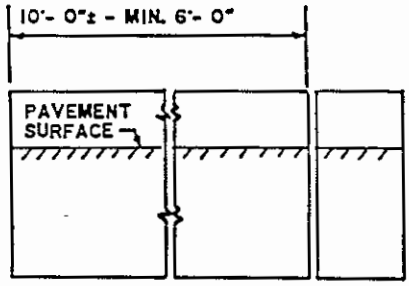

6" GRAVEL BASE

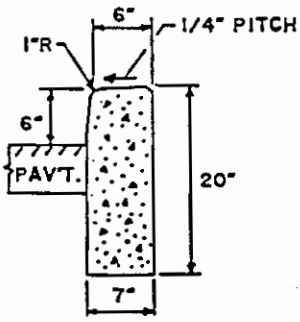

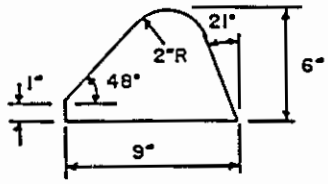

BITUMINOUS CONCRETE LIP CURBING

(MACHINE FORMED)

CONCRETE CURBING

NO.	DESCRIPTION	DATE	APPROVE

REVISIONS

TOWN OF EAST HARTFORD
STANDARD DETAIL

CURBING

DATE: JUNE 1993

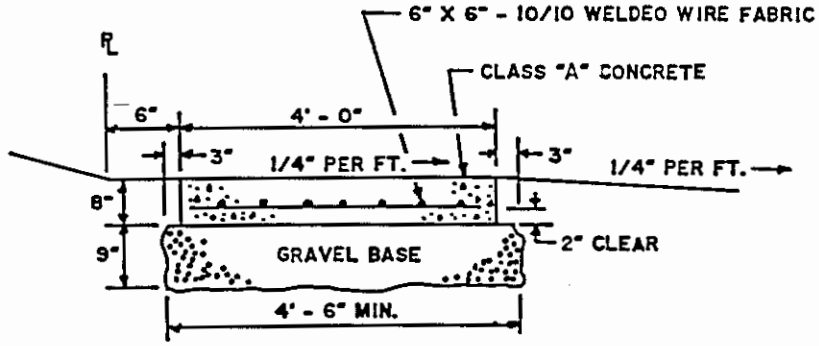

8" THICK CONCRETE SIDEWALK

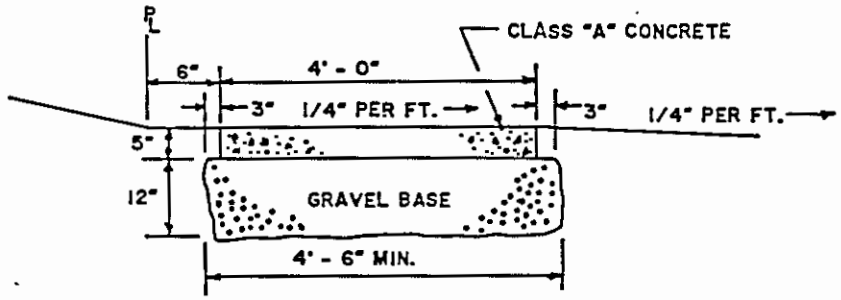

5" THICK CONCRETE SIDEWALK

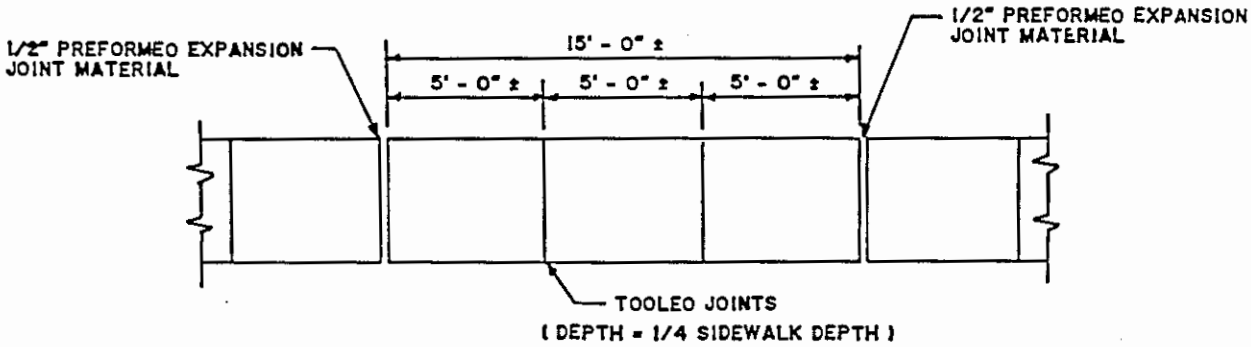

SIDEWALK

NOTES:

1. FOR SIDEWALK TREATMENT AT INTERSECTIONS SEE STREET TYPICAL CROSS SECTION DETAILS.
2. 8" THICK SIDEWALK IS TO BE USED AT ALL DRIVEWAY CROSSINGS AND IN OTHER AREAS DIRECTED.
3. TOOLED JOINT PATTERN IS TO BE DIRECTED TO CONFORM TO ADJACENT MARKINGS.

NO.	DESCRIPTION	DATE	APPROVE

REVISIONS

TOWN OF EAST HARTFORD
STANDARD DETAIL

SIDEWALK

DATE: JUNE 1993

SIDEWALK RAMPS TYPE I

SUGGESTED TREATMENTS FOR SIDEWALK RAMPS

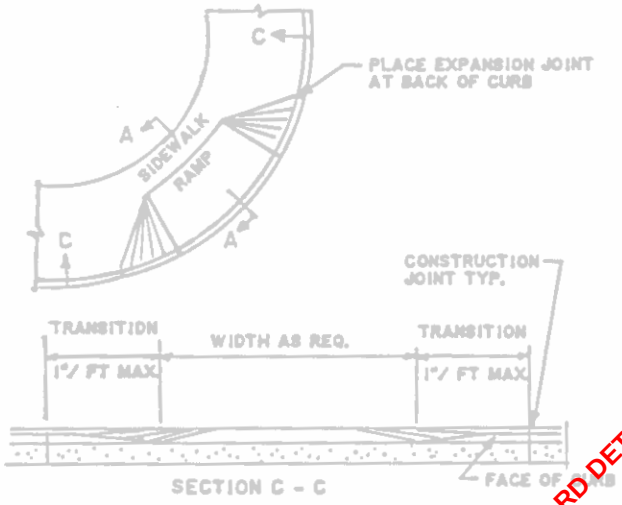

SIDEWALK RAMP TYPE II

GENERAL NOTES

1. SIDEWALK RAMPS SHALL BE CONSTRUCTED AT ALL PEDESTRIAN CROSSWALKS IN ALL NEW DESIGNS AND AT PEDESTRIAN CROSSWALK LOCATIONS WHERE AN EXISTING CURB OR WALK IS TO BE DISTURBED BY CONSTRUCTION.
2. DRAINAGE DESIGN IN THE VINCINITY OF SIDEWALK RAMPS SHALL BE CONSIDERED AN INTEGRAL PART OF THE DESIGN OF THESE RAMPS. NO DRAINAGE STRUCTURES SHALL BE PLACED WITHIN THE LIMITS OF A SIDEWALK RAMP.
3. ALL SIDEWALK RAMPS SHALL BE CONSTRUCTED IN ACCORDANCE WITH THE DETAILS FOR 5" CONCRETE SIDEWALK, EXCEPT THAT THE FINAL TEXTURE OF THE CONCRETE SURFACE SHALL BE A COARSE BROOM FINISH TRANSVERSE TO THE SLOPE OF THE RAMP.
4. ALL SIDEWALK RAMPS SHALL BE CONSTRUCTED OF PORTLAND CEMENT CONCRETE.
5. CARE SHALL BE TAKEN TO ASSURE A UNIFORM GRADE ON THE RAMP, FREE OF SAGS AND SHORT GRADE CHANGES.
6. MINIMUM WIDTH OF SIDEWALK RAMP SHALL BE 4 FEET.
7. THE BOTTOM OF THE RAMP (GUTTER LINE) SHALL BE BEVELED.

VOID - SEE CTDOT STANDARD DETAILS FOR ACCESSIBLE RAMPS

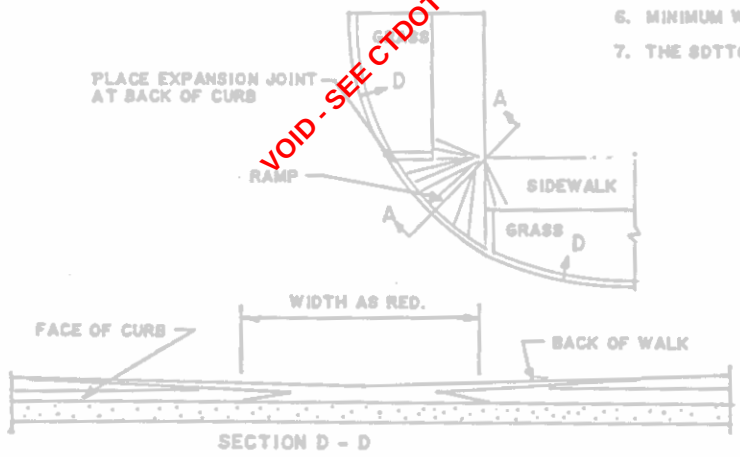

SIDEWALK RAMP TYPE III

NO.	DESCRIPTION	DATE	APPROVE

REVISIONS

TOWN OF EAST HARTFORD
STANDARD DETAIL

SIDEWALK RAMPS

DATE: JUNE 1993

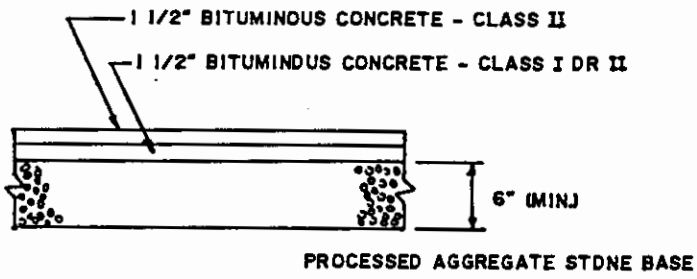

PAVEMENT

TOWN OF EAST HARTFORD
STANDARD DETAIL

PAVEMENT

NO.	DESCRIPTIONS	DATE	APPROVE

REVISIONS

DATE: JUNE 1993

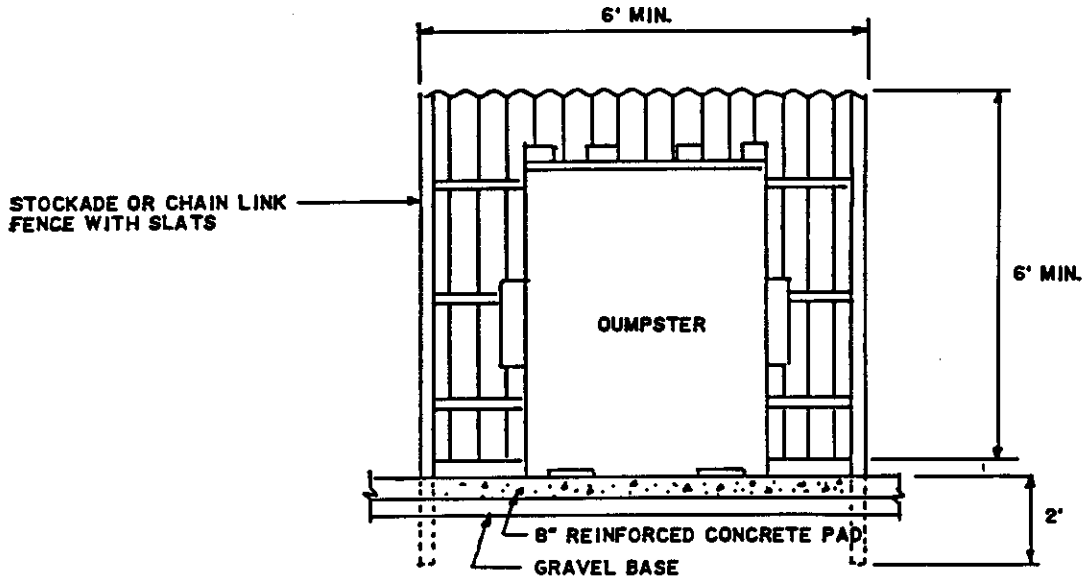

NOTE: THE SIZE OF THE DUMPSTER PAD IS TO BE DETERMINED BY THE NUMBER & SIZE OF PROPROSED DUMPSTERS.

ELEVATION

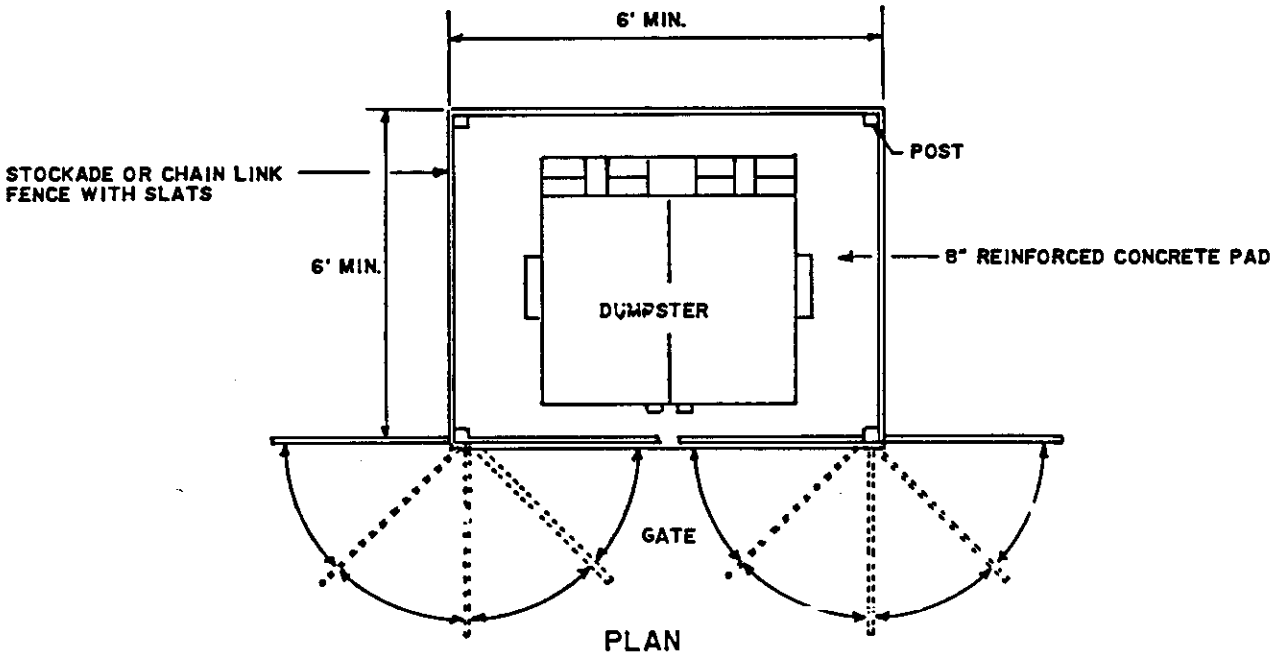

PLAN

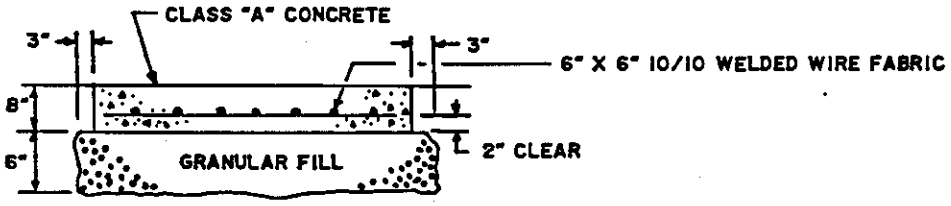

DUMPSTER PAD SECTION

NO.	DESCRIPTION	DATE	APPROVE

REVISIONS

TOWN OF EAST HARTFORD
STANDARD DETAIL

DUMPSTER

DATE: JUNE 1993

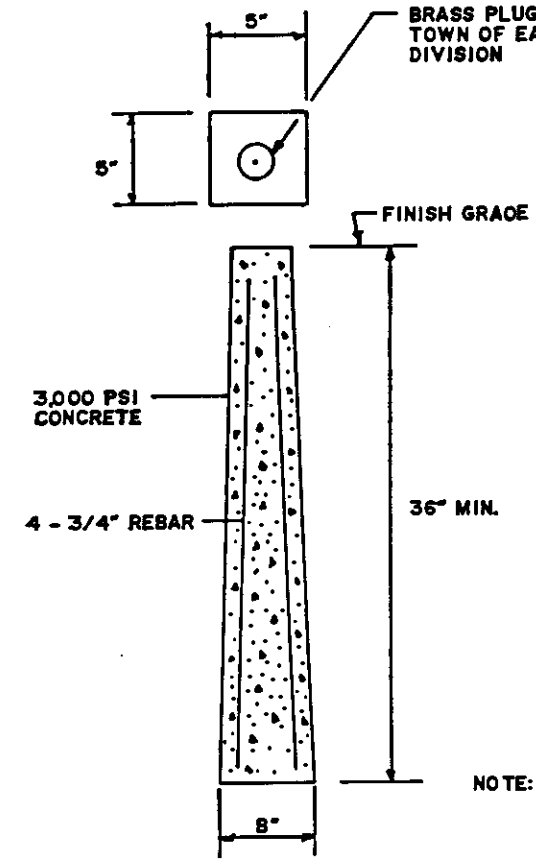

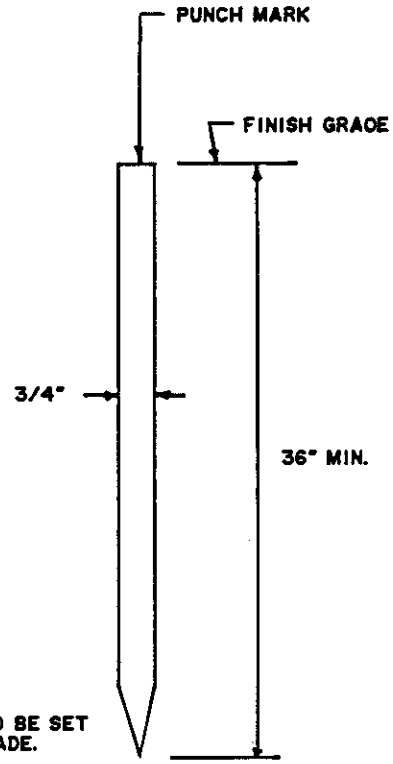

NOTE: MONUMENTATION IS TO BE SET EVEN WITH FINISH GRADE.

CONCRETE MONUMENT

IRON PIN

CAST IRON FRAME & COVER FOR TOWN BOUNDARY MARKER. MIN. WGT. 62 LBS. -CONFORM TO AASHTO M105 CLASS 25.

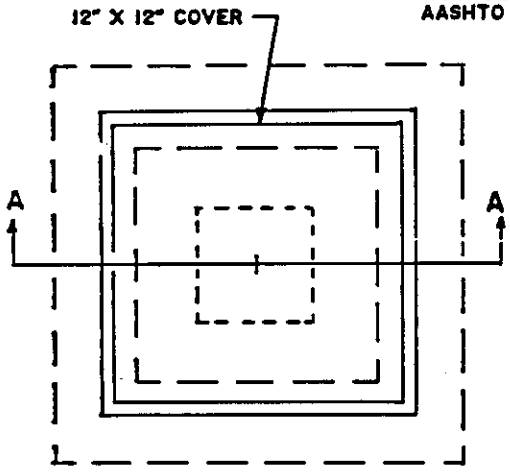

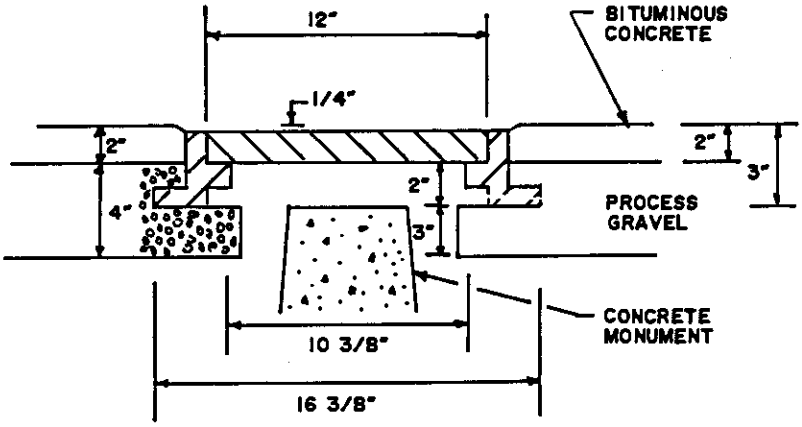

SECTION A - A

MONUMENT COVER FOR DRIVEWAY INSTALLATION

NO.	DESCRIPTION	DATE	APPROVE

REVISIONS

TOWN OF EAST HARTFORD STANDARD DETAIL

. MONUMENTATION

DATE: JUNE 1993

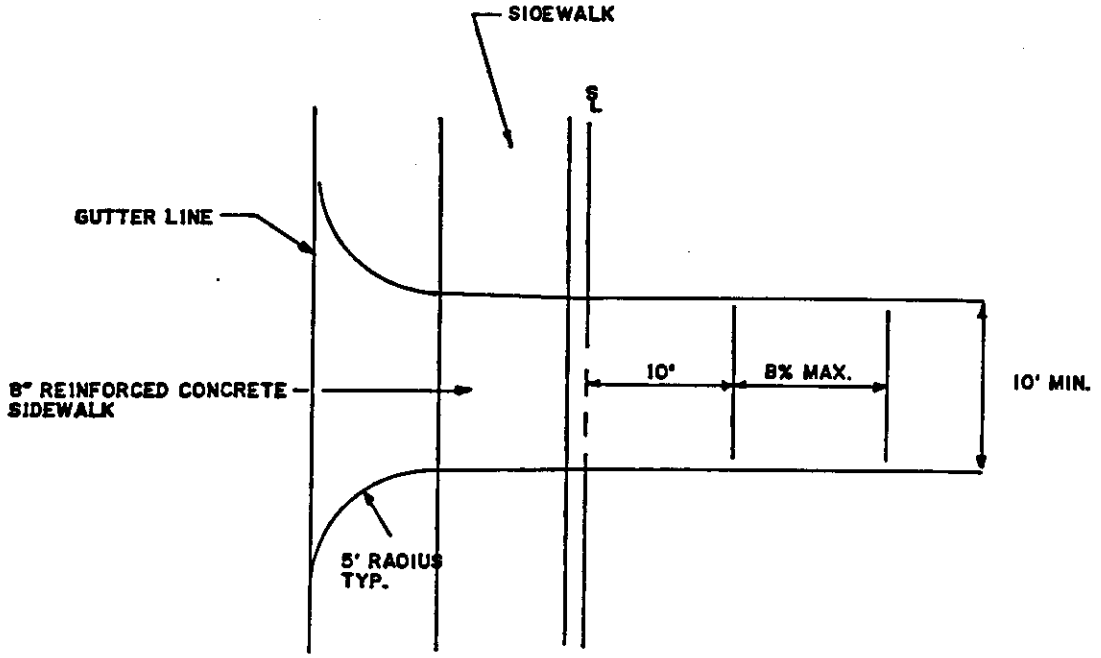

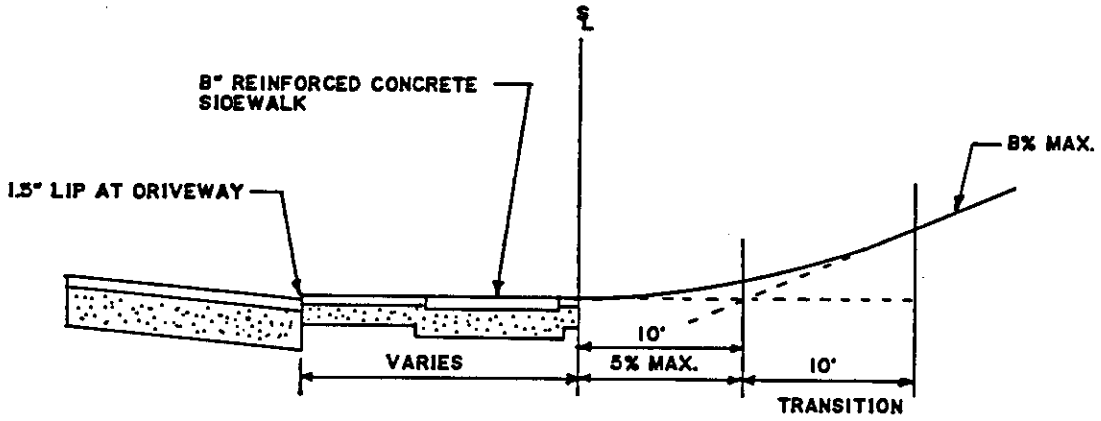

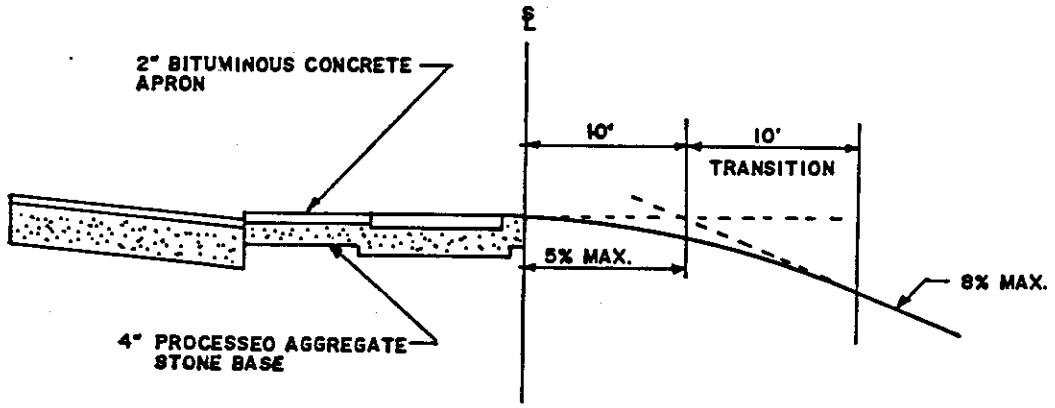

NO.	DESCRIPTION	DATE	APPROVE
	REVISIONS		

TOWN OF EAST HARTFORD
STANDARD DETAIL

DRIVEWAY

DATE: JUNE 1993

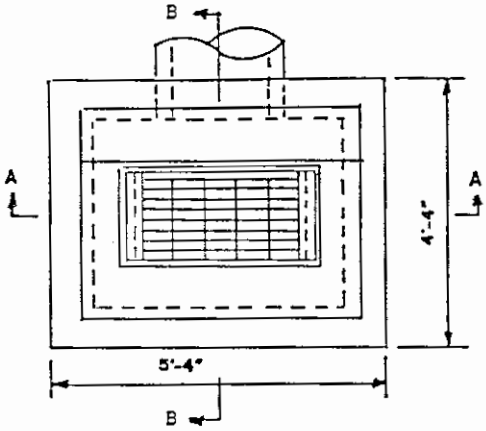

PLAN

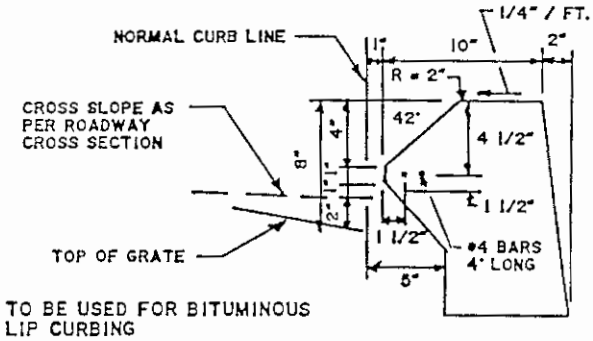

TO BE USED FOR BITUMINOUS LIP CURBING

AN APPROPRIATE DETAIL MUST BE PROVIDED BY THE ENGINEER IF A DIFFERENT TYPE OF CURB IS UTILIZED.

DETAIL OF CURB INLET

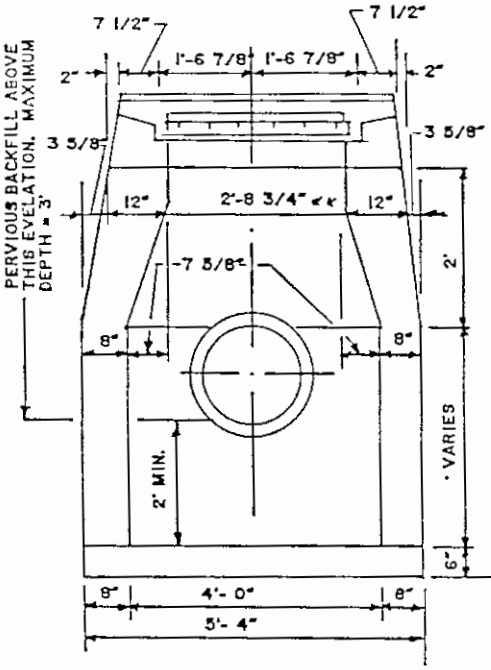

SECTION A - A

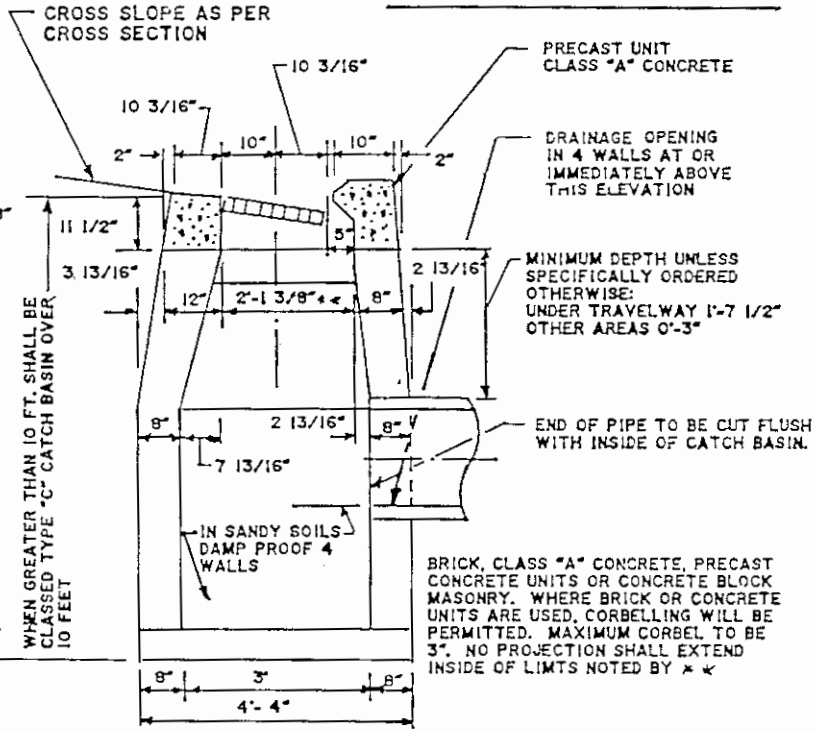

SECTION B - B

NOTES

1. WHERE TYPE "C" CATCH BASIN IS CONSTRUCTED IN PAVEMENT AREA THE NORMAL CROSS SLOPE OF THE GUTTER SHALL BE VARIED TO MATCH CROSS SLOPE OF GRATE.
2. WALLS OF ALL CATCH BASINS OVER 10 FEET DEEP TO BE INCREASED TO TO 12" THICK. INSIDE DIMENSIONS TO REMAIN THE SAME.
3. PRECAST CONCRETE TOP SUPPLIED SHALL BE APPROVED BY THE TOWN ENGINEER PRIOR TO INSTALLATION.
4. PRECAST CONCRETE SUMP UNITS WILL BE PERMITTED. WALL THICKNESS SHALL BE THE SAME AS REQUIRED FOR CONSTRUCTION WITH OTHER PERMITTED MASONRY MATERIALS. UNITS SHALL BE SUITABLY REINFORCED TO PREVENT CRACKING DURING HANDLING AND PLACING. UNITS SHALL BE APPROVED BY TOWN ENGINEER BEFORE INSTALLATION.

ALL PRECAST CONCRETE PRODUCTS MUST HAVE THE CASTING DATE CLEARLY LABELED ON EACH PRODUCT. NO PRECAST CONCRETE PRODUCT SHALL BE DELIVERED TO THE SITE WITHIN THE SEVEN DAY PERIOD FOLLOWING THE CASTING DATE.

NO.	DESCRIPTION	DATE	APPROVE

REVISIONS

TOWN OF EAST HARTFORD
STANDARD DETAIL

TYPE "C" CATCH BASIN

DATE: JUNE 1993

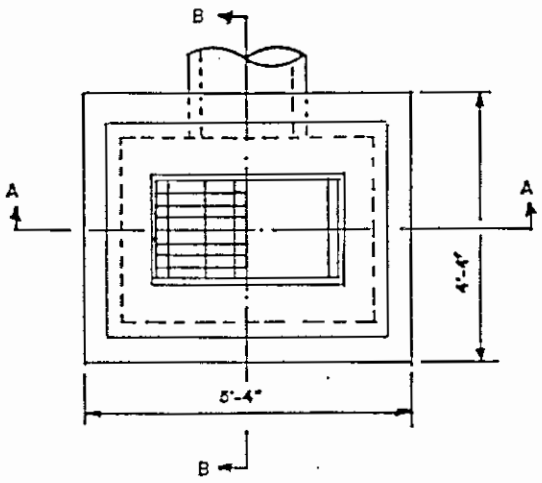

PLAN

NOTES

1. WALLS OF ALL CATCH BASINS OVER 10 FEET DEEP TO BE INCREASED TO 12" THICK. INSIDE DIMENSIONS TO REMAIN THE SAME.
2. PRECAST CONCRETE TOPS SUPPLIED SHALL BE APPROVED BY THE TOWN ENGINEER BEFORE INSTALLATION.
3. PRECAST CONCRETE SUMP UNITS WILL BE PERMITTED. WALL THICKNESS SHALL BE SAME AS REQUIRED FOR CONSTRUCTION WITH OTHER PERMITTED MASONRY MATERIAL. UNITS SHALL BE SUITABLY REINFORCED TO PREVENT CRACKING DURING HANDLING AND PLACING. UNITS SHALL BE APPROVED BY THE TOWN ENGINEER BEFORE INSTALLATION.

ALL PRECAST CONCRETE PRODUCTS MUST HAVE THE CASTING DATE CLEARLY LABELED ON EACH PRODUCT. NO PRECAST CONCRETE PRODUCT SHALL BE DELIVERED TO THE SITE WITHIN THE SEVEN DAY PERIOD FOLLOWING THE CASTING DATE.

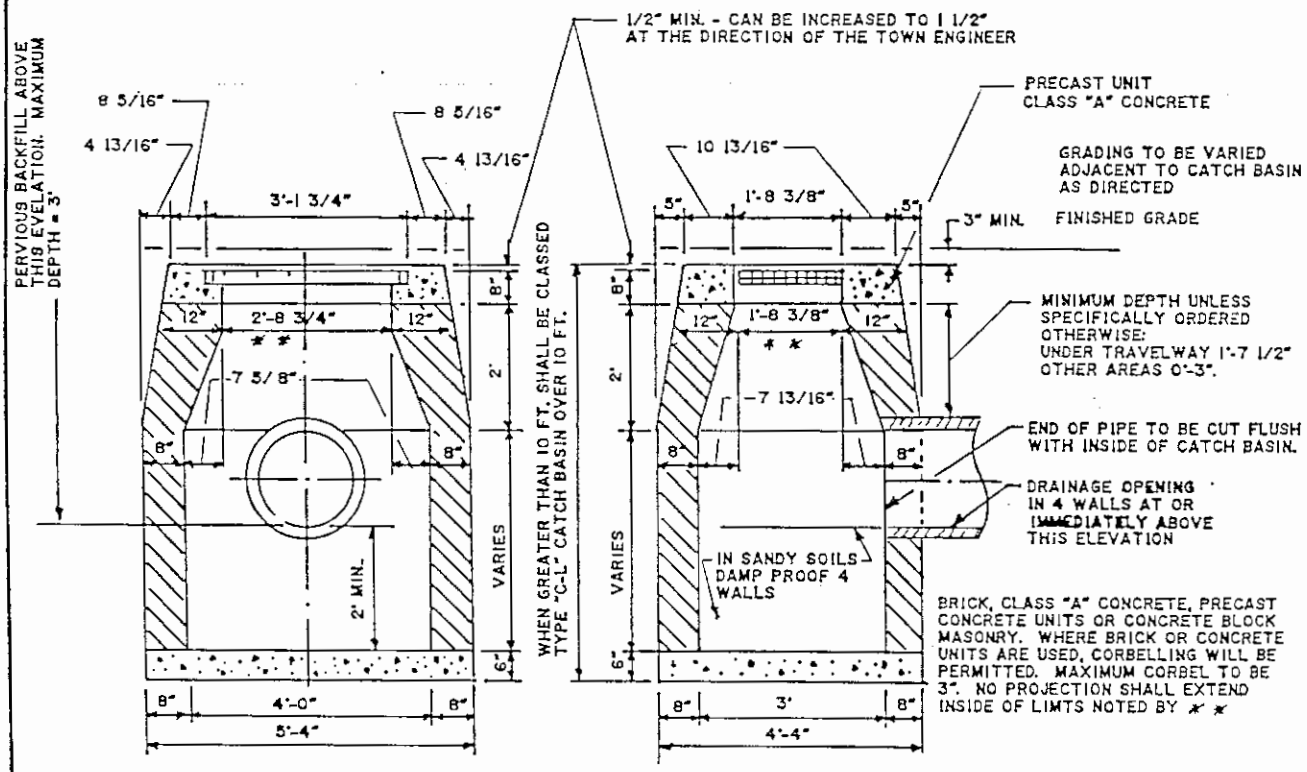

SECTION A - A

SECTION B - B

NO.	DESCRIPTION	DATE	APPROVE

REVISIONS

TOWN OF EAST HARTFORD
STANDARD DETAIL

TYPE "C - L" CATCH BASIN

DATE: JUNE 1993

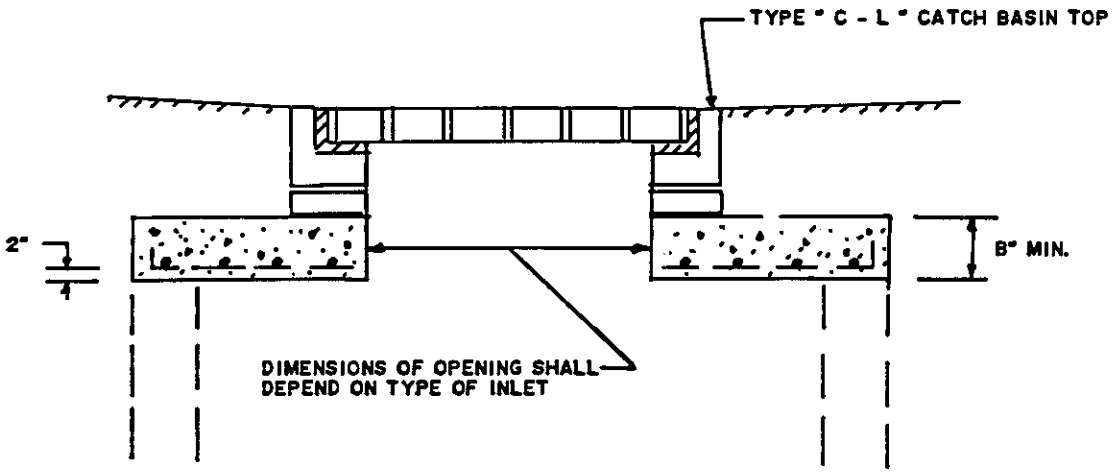

TRANSITION CATCH BASIN SLAB

NOTES

1. TRANSITION SLABS FOR CATCH BASINS MAY BE USED WITH THE APPROVAL OF THE TOWN ENGINEER.
2. THE THICKNESS OF THE SLAB & REINFORCING WILL VARY. THE SLAB SHALL BE DESIGNED FOR A H - 20 LOADING.

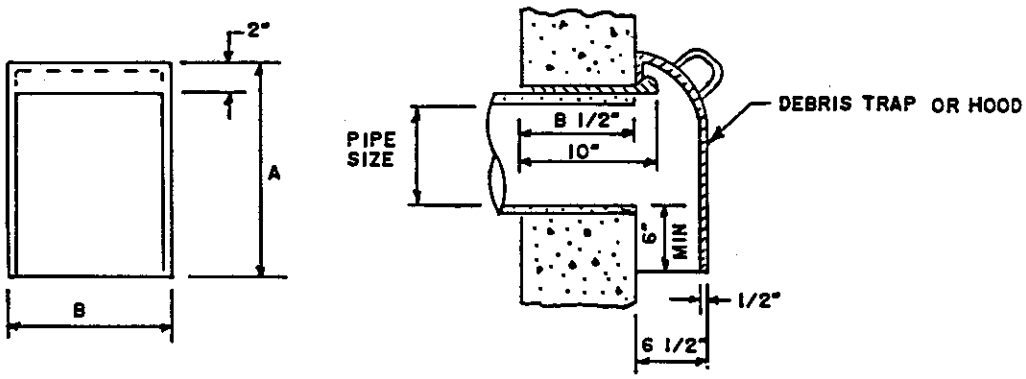

A	B	PIPE SIZE	WT. (LBS)	SET (# OF HOOKS)
16"	12"	6"	70	2
18"	12"	8"	75	2
20"	12"	10"	85	2
22"	18"	12"	100	2
25"	17"	15"	135	2
28"	20"	18"	155	2

NOTE

MANUFACTURER CATALOG NUMBER IS TO BE INDICATED ON THE CONSTRUCTION PLANS.

DEBRIS TRAP

NO.	DESCRIPTION	DATE	APPROVE

REVISIONS

TOWN OF EAST HARTFORD
STANDARD DETAIL

TRANSITIONAL CATCH BASIN SLAB AND DEBRIS TRAP

DATE: JUNE 1993

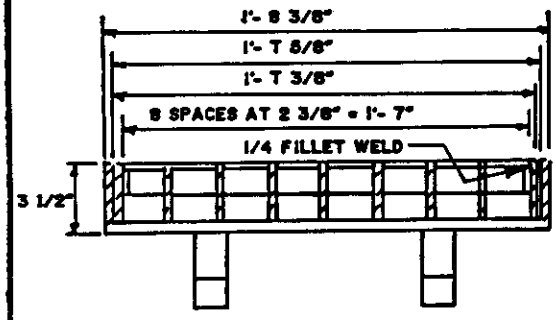

TRANSVERSE SECTION OF FRAME AND GRATE

NOTES

1. STEEL
ALL STEEL TO BE STRUCTURAL GRADE CONFORMING TO A.S.T.M. DES. A - 7, OR A - 283-46T, GRADE B OR BETTER, EXCEPT IN THE CHEMICAL COMPOSITION OF THE STEEL THE 0.20% OF COPPER MAY BE OMITTED.

2. GALVANIZING
GRATES SHALL BE GALVANIZED AS SPECIFIED IN THE STATE OF CONNECTICUT FORM 814.

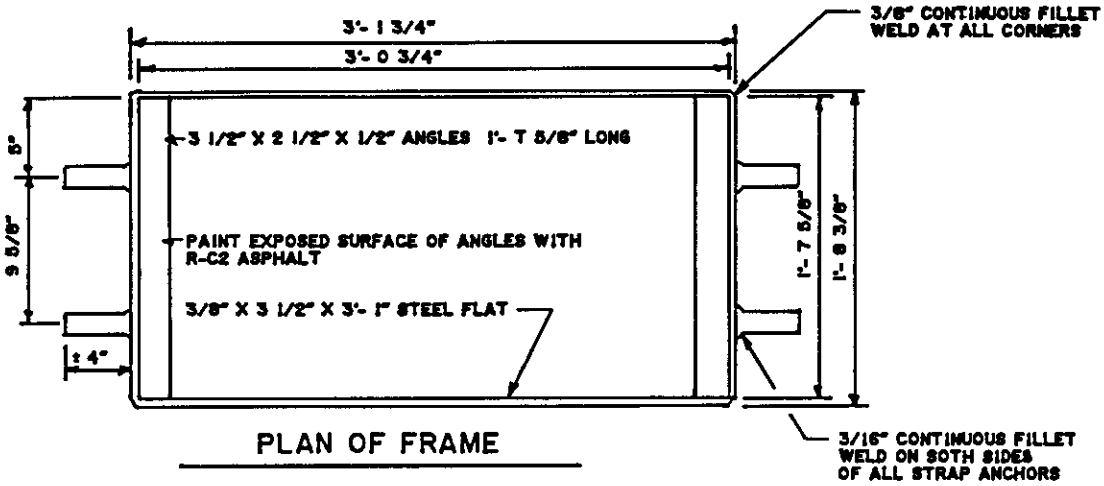

PLAN OF FRAME

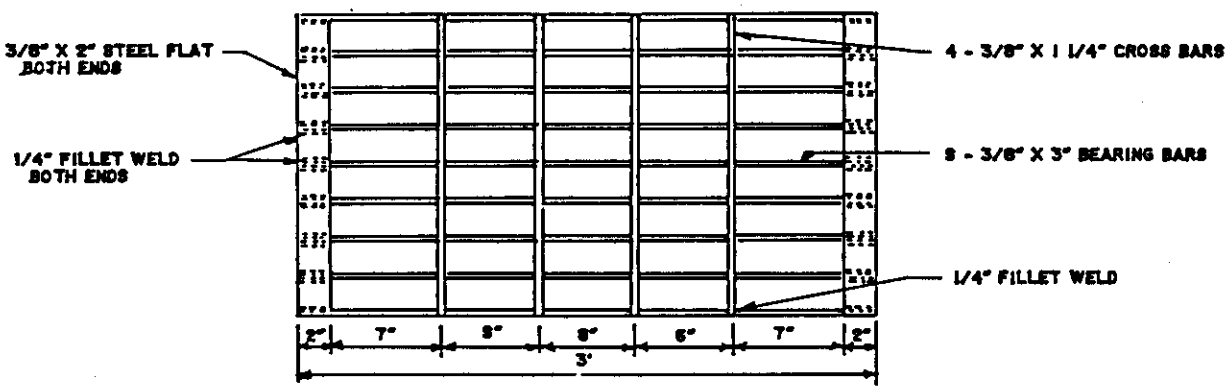

PLAN OF GRATE

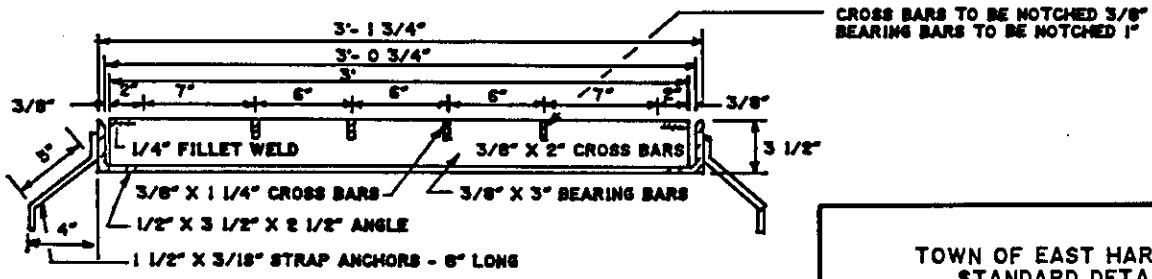

LONGITUDINAL SECTION OF FRAME & GRATE

NO.	DESCRIPTION	DATE	APPROVE

REVISIONS

TOWN OF EAST HARTFORD
STANDARD DETAIL

STEEL FRAME AND GRATE
FOR CATCH BASINS

DATE: JUNE 1993

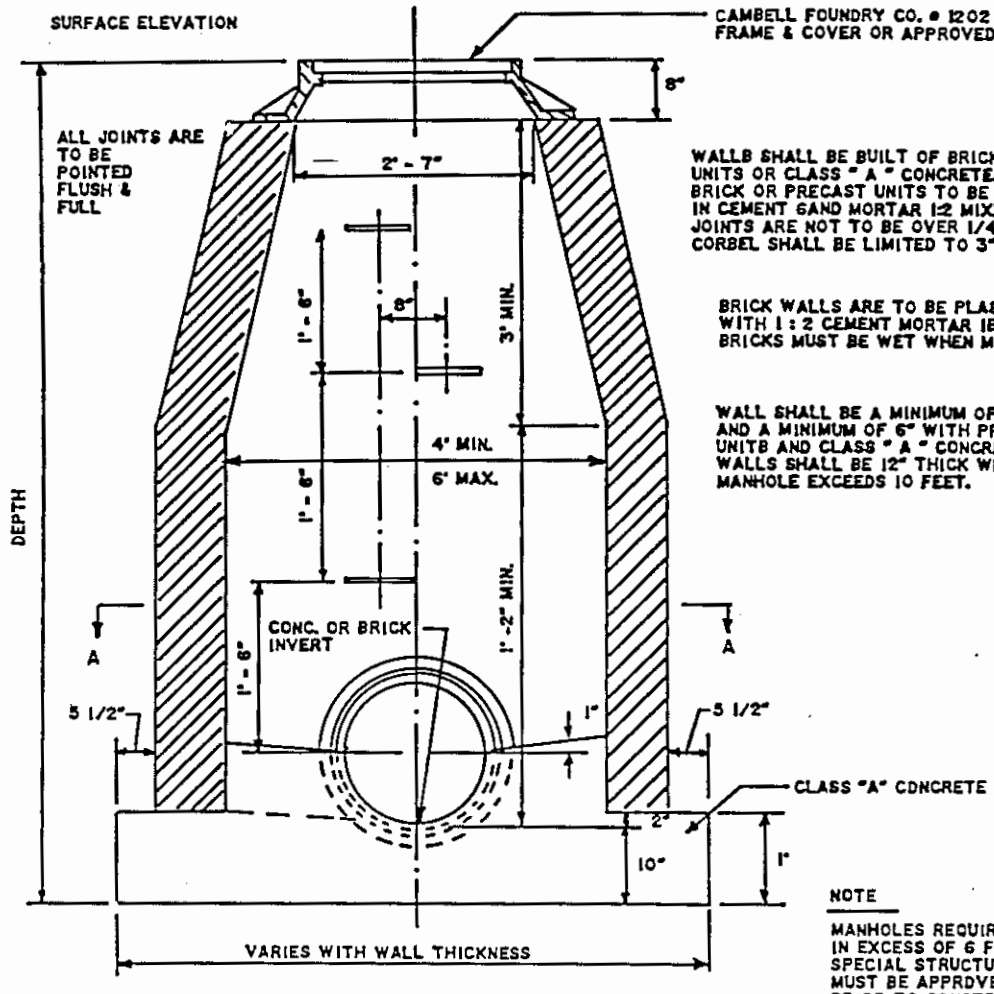

WALLS SHALL BE BUILT OF BRICKS, PRECAST CONCRETE UNITS OR CLASS " A " CONCRETE.
BRICK OR PRECAST UNITS TO BE LAID IN CEMENT SAND MORTAR 1:2 MIX.
JOINTS ARE NOT TO BE OVER 1/4" ON INSIDE FACE.
CORBEL SHALL BE LIMITED TO 3" PER COURSE.

BRICK WALLS ARE TO BE PLASTERED OUTSIDE WITH 1 : 2 CEMENT MORTAR IS APPLIED.
BRICKS MUST BE WET WHEN MOTAR IS APPLIED.

WALL SHALL BE A MINIMUM OF 8" WITH BRICK, AND A MINIMUM OF 6" WITH PRECAST CONCRETE UNITS AND CLASS " A " CONCRETE.
WALLS SHALL BE 12" THICK WHEN DEPTH OF MANHOLE EXCEEDS 10 FEET.

M.H. I.D.	MAX. PIPE SIZE
4'	36"
5'	48"
6'	54"

NOTE

MANHOLES REQUIRING INSIDE DIAMETERS IN EXCESS OF 6 FEET WILL BE CONSIDERED SPECIAL STRUCTURES, DETAILS OF WHICH MUST BE APPROVED BY THE TOWN ENGINEER PRIOR TO CONSTRUCTION.

SIDE VIEW

NOTE: ALL CORNERS TO BE SLIGHTLY ROUNDED. CASTINGS SHALL BE WHOLE, SOUND, FREE FROM HOLES AND OTHER DEFECTS. ALL SIDES ARE TO TAPERED 1/8".

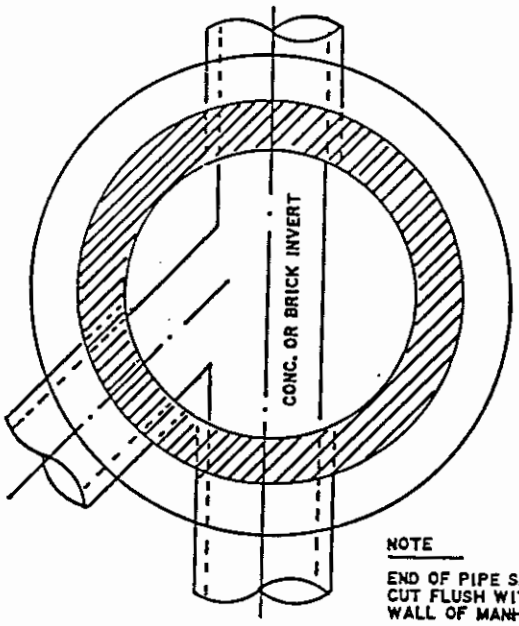

NOTE

END OF PIPE SHALL BE CUT FLUSH WITH INSIDE WALL OF MANHOLE.

SECTION A - A

TOP VIEW

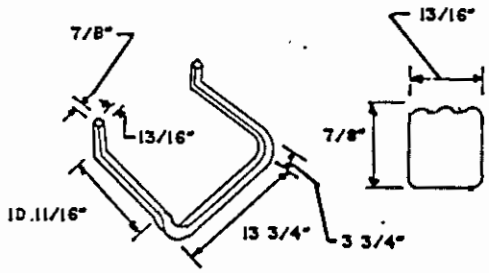

LADDER RUNG

LADDER RUNG TO BE FORMED FROM ALUMINIUM ALLOY 6061 - T6 OR AS APPROVED BY THE TOWN ENGINEER.

NO.	DESCRIPTION	DATE	APPROVE

REVISIONS

TOWN OF EAST HARTFORD
STANDARD DETAIL

MASONRY MANHOLE

DATE: JUNE 1993

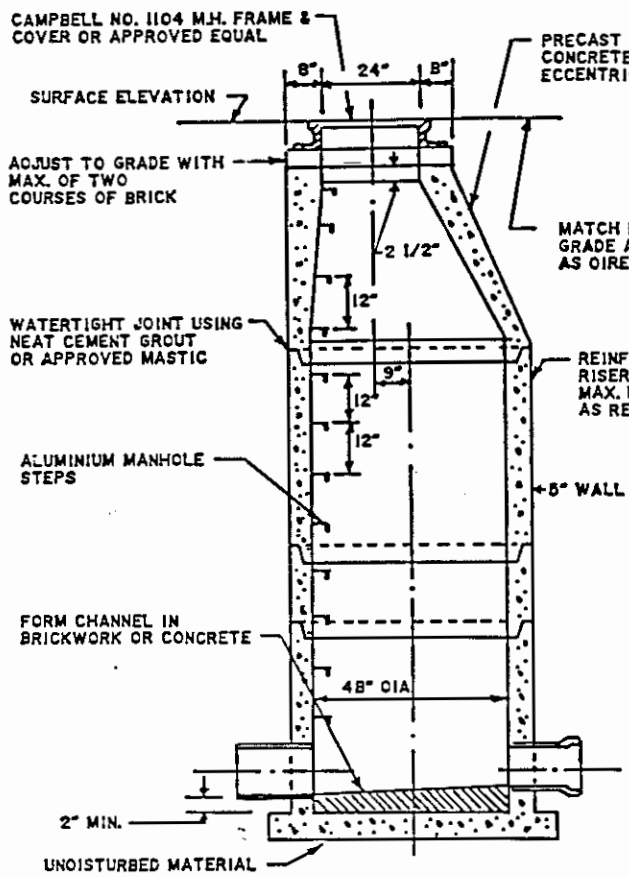

VERTICAL SECTION

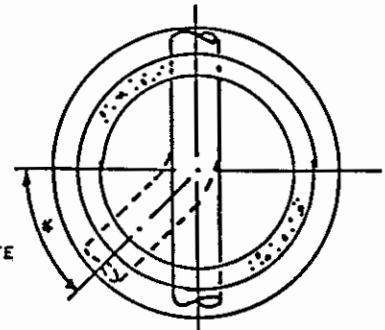

HORIZONTAL SECTION BASE

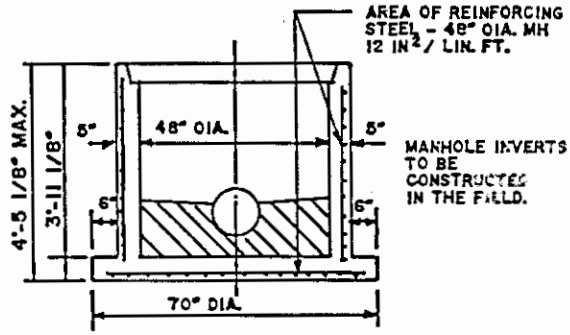

VERTICAL SECTION BASE

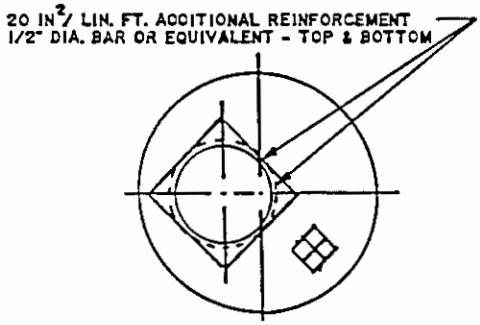

HORIZONTAL SECTION SLAB TOP

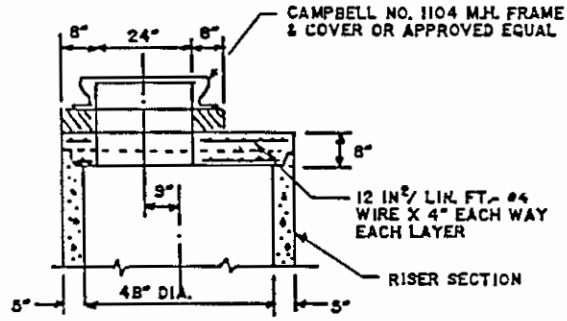

VERTICAL SECTION SLAB TOP

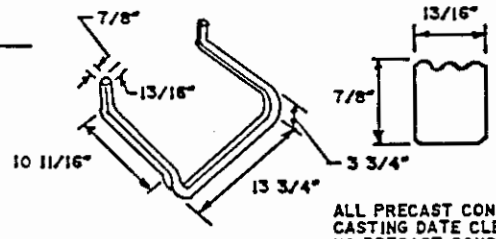

LADDER RUNG TO BE FORMED FROM ALUMINIUM ALLOY 6061 - T6

ISOMETRIC VIEW ALUMINIUM LADDER RUNG

NOTES:

1. A.S.T.M. SPEC'S C478-63T
2. MAX. PIPE SIZE FOR 48" DIA. MANHOLE IS 24" DIA.
3. EXPANDED BASE SECTIONS WILL BE ALLOWED. DETAILS MUST BE APPROVED BY TOWN ENGINEER
4. ABSORBTION NOT TO EXCEED 8% PER A.S.T.M. SPEC C-76

ALL PRECAST CONCRETE PRODUCTS MUST HAVE THE CASTING DATE CLEARLY LABELED ON EACH PRODUCT. NO PRECAST CONCRETE PRODUCT SHALL BE DELIVERED TO THE SITE WITHIN THE SEVEN DAY PERIOD FOLLOWING THE CASTING DATE.

NO.	DESCRIPTION	DATE	APPROVE

REVISIONS

TOWN OF EAST HARTFORD
STANDARD DETAIL

PRECAST MANHOLE

DATE: JUNE 1993

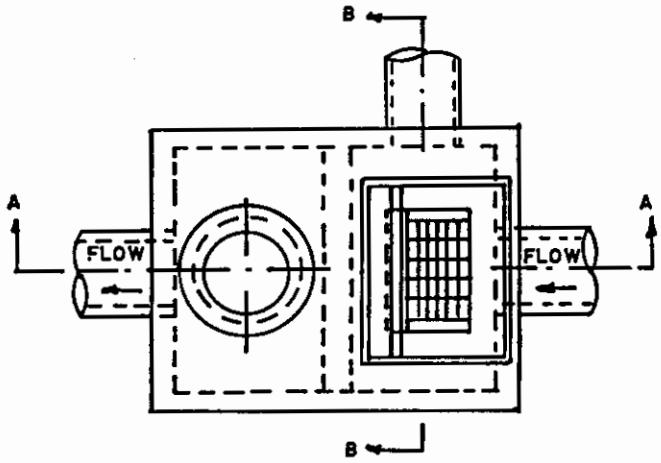

PLAN

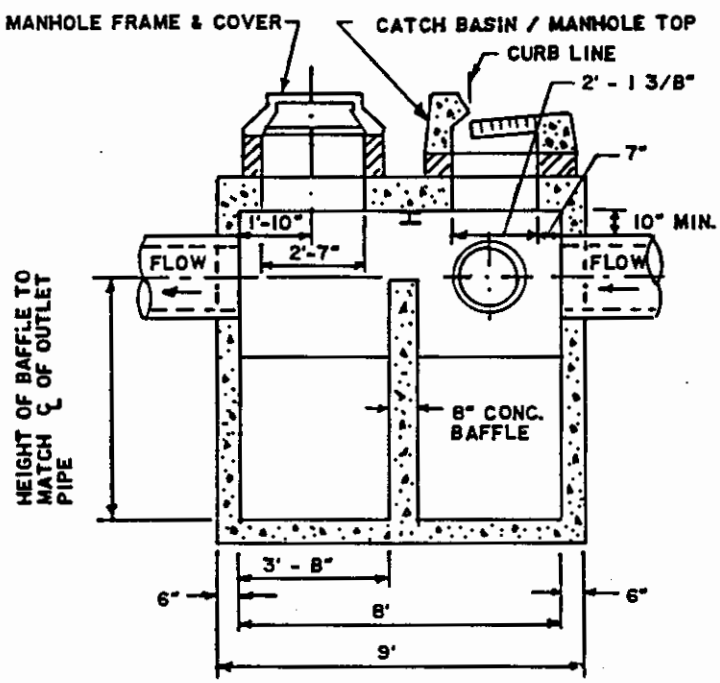

SECTION A - A

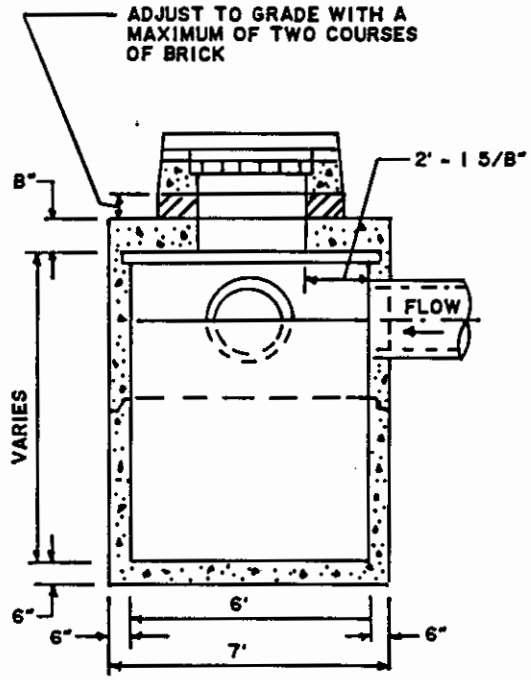

SECTION B - B

NOTES

1. CONSTRUCTION JOINTS ARE TO BE SEALED WITH 1" DIAMETER BUTYL RUBBER OR EQUIVALENT.
2. BAFFLE CONSTRUCTION OF CAST MATERIALS SHALL HAVE THRU HOLES OR CONCRETE BLOCK WITH WEEP HOLES ABOVE THE OUTLET FLOW LINE.
3. ALUMINUM STEPS SHALL BE INSTALLED AT 12" VERTICAL INTERVALS BEGINNING 12" BELOW THE TOP OF FRAME ELEVATION.
4. THE UNIT SHALL BE DESIGNED FOR A H - 20 LOADING.
5. ALL PRECAST CONCRETE PRODUCTS MUST HAVE THE CASTING DATE CLEARLY LABELED ON EACH PRODUCT. NO PRECAST CONCRETE PRODUCT SHALL BE DELIVERED TO THE SITE WITHIN THE SEVEN DAY PERIOD FOLLOWING THE CASTING DATE.

NO.	DESCRIPTION	DATE	APPROVE

REVISIONS

TOWN OF EAST HARTFORD
STANDARD DETAIL

SEDIMENTATION STRUCTURE

DATE: JUNE 1993

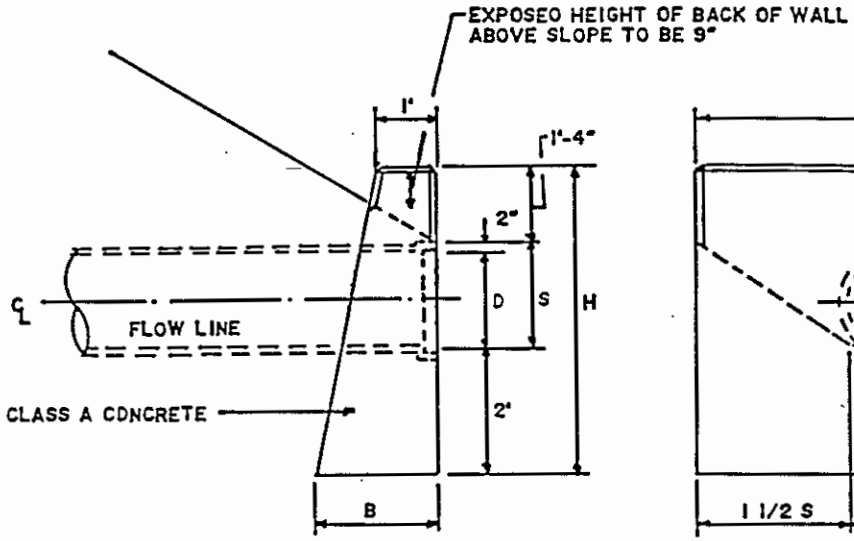

WALL AT FOOT OF SLOPE

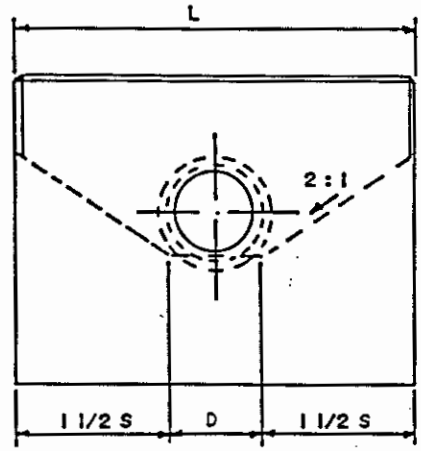

FRONT ELEVATION

NOTE .

ALL EDGES OF EXPOSED SURFACES ARE TO BE CHAMFERED ONE INCH.

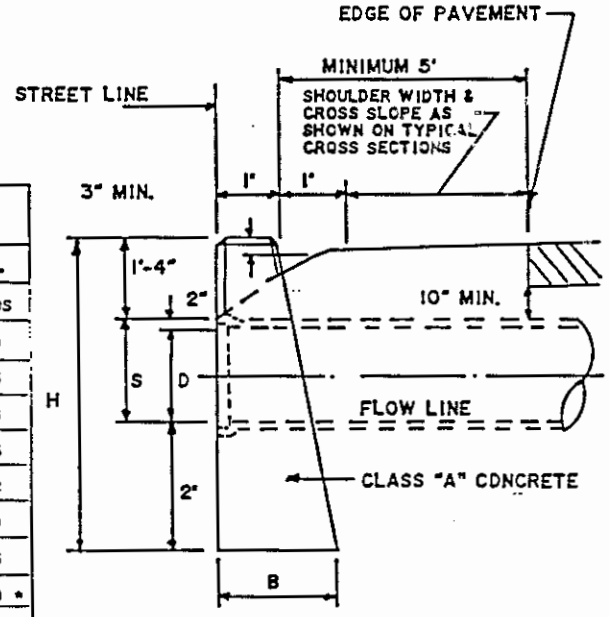

WALL AT SHOULDER

DIMENSION AND QUANTITIES FOR ONE END WALL BASED ON S = 0 + 2"						
D	S	H	L	BATTER	B	VOL.
INS.	FT & INS	FT & INS	FT & INS	INS / FT	FT & INS	CU. YDS
12	1' - 2"	4' - 6"	4' - 6"	2 1/2"	1'-11 1/4"	1.10
15	1' - 5"	4' - 9"	5' - 6"	2 1/2"	1'-11 7/8"	1.45
18	1' - 8"	5' - 0"	6' - 6"	2 1/2"	2'-0 1/2"	1.83
21	1' -11"	5' - 3"	7' - 6"	2 1/2"	2'-1 1/8"	2.26
24	2' - 2"	5' - 6"	8' - 6"	2 1/2"	2'-1 3/4"	2.72
30	2' - 8"	6' - 0"	10'- 6"	3"	2' - 3"	3.79
36	3' - 2"	6' - 6"	12'- 6"	3"	2'-7 1/2"	5.45
42	3' - 8"	7' - 0"	14'- 6"	3"	2' - 9"	6.40 *
48	4' - 2"	7' - 6"	16'- 6"	3"	2'-10 1/2"	8.00 *

* VOLUME OF PIPE WITHIN ENDWALL HAS BEEN DEDUCTED.

H = TOTAL HEIGHT OF ENDWALL

B = BASE

D = INSIDE DIAMETER OF PIPE

S = HEIGHT OF SLOPE ABOVE FLOW LINE AT FACE OF WALL - MIN. = 0 + 2"

L = LENGTH OF WALL

WHEN ENDWALL IS TO BE USED FOR TWO PIPES, THE DIMENSIONS OF THE ENDWALL SHALL CONFORM TO THOSE REQUIRED FOR THE LARGER PIPE, EXCEPT THE DIMENSION "L" SHALL BE INCREASED BY THE OUTSIDE DIAMETER OF THE SMALLER PIPE PLUS TWO FEET.

TOWN OF EAST HARTFORD
STANDARD DETAIL

STANDARD ENDWALL

NO.	DESCRIPTION	DATE	APPROVE
	REVISIONS		

DATE: JUNE 1993

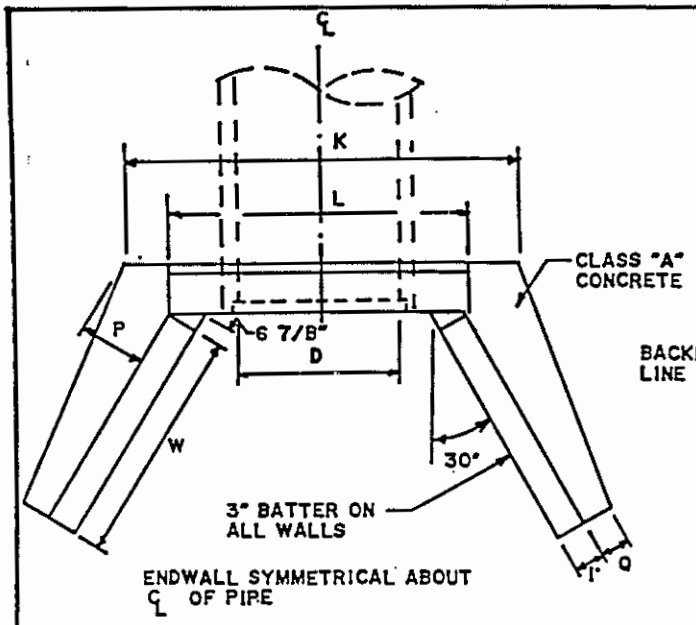

PLAN

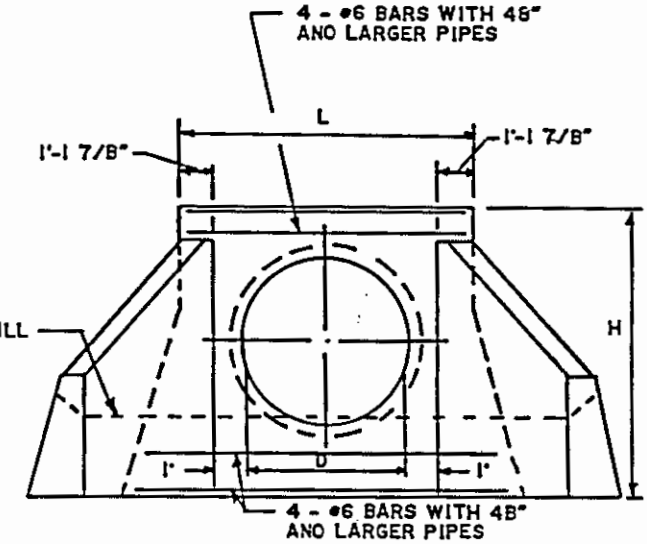

FRONT ELEVATION

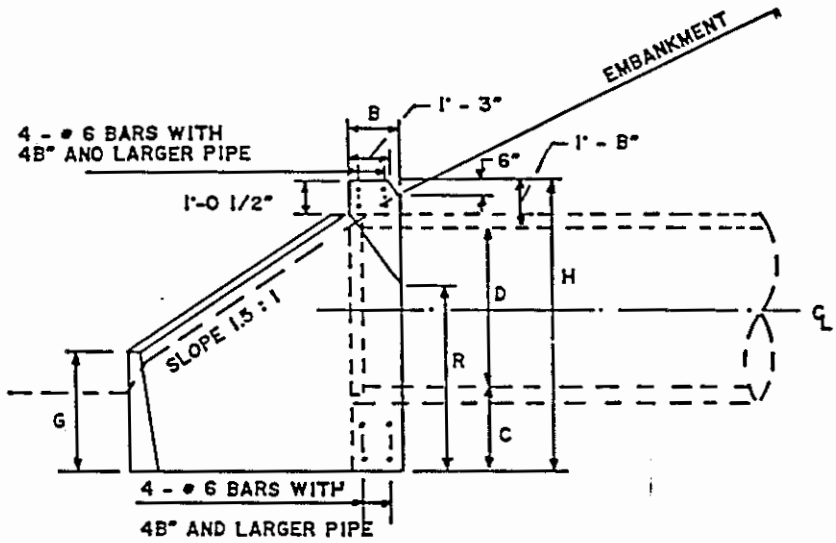

SIDE ELEVATION

DIMENSIONS AND QUANTITIES FOR ONE WING TYPE ENDWALL											
O	B	C	G	H	K	L	P	Q	R	W	VOL.
INS	FT & INS	FT & INS	FT & INS	FT & INS	FT & INS	FT & INS	FT & INS	FT & INS	FT & INS	FT & INS	CU. YDS
36	1' - 6"	2' - 0"	3' - 3"	6' - 8"	9'-1 1/2"	7'-3 3/4	1'-4 7/8"	0'-9 3/4"	3'-4 7/8"	4'-1 3/8"	5.17
42	1' - 6"	2' - 0"	3' - 3"	7' - 2"	9'-10 1/2"	7'-9 3/4	1'-6 3/8"	0'-9 3/4"	3'-10 1/2"	4'-11 3/4"	5.75
48	1' - 7"	2' - 6"	3' - 9"	8' - 2"	10'- 10"	8'-3 3/4	1'-9 3/8"	0'-11 1/4"	4' - 9"	5' - 10"	7.78
54	1' - 7"	2' - 6"	3' - 9"	8' - 8"	11'-7 1/2"	8'-9 3/4	1-10 7/8"	0'-11 1/4"	5' - 3"	6'-8 1/2"	8.51
60	1' - 7"	2' - 6"	3' - 9"	9' - 2"	12'-4 1/2"	9'-3 3/4	2'-0 3/8"	0'-11 1/4"	5' - 9"	7' - 7"	10.46
72	1' - 7"	2' - 6"	3" - 9"	10'- 2"	13-10 3/4"	10-3 3/4	2'-3 3/8"	0'-11 1/4"	6' - 9"	9'-3 3/4"	13.56

WHEN ONE ENDWALL IS TO BE FOR TWO PIPES, THE DIMENSIONS OF THE ENDWALL SHALL CONFORM TO THOSE REQ. FOR THE LARGER PIPE, EXCEPT THE DIMENSION "L" SHALL BE INCREASED BY THE OUTSIDE DIAMETER OF THE SMALLER PIPE PLUS TWO FEET.

NO.	DESCRIPTION	DATE	APPROVE

REVISIONS

TOWN OF EAST HARTFORD
STANDARD DETAIL

WING TYPE ENDWALL

DATE: JUNE 1993

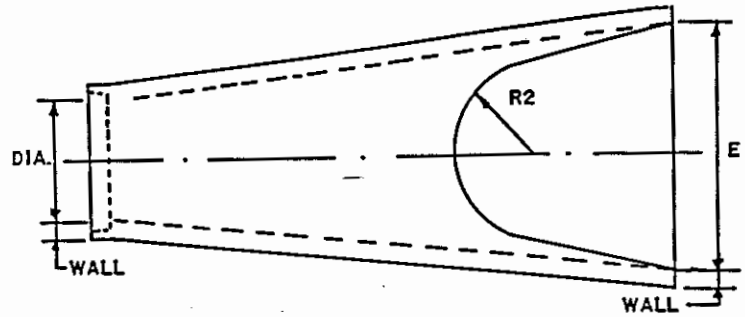

PLAN

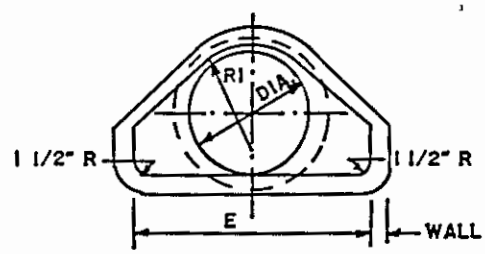

END ELEVATION

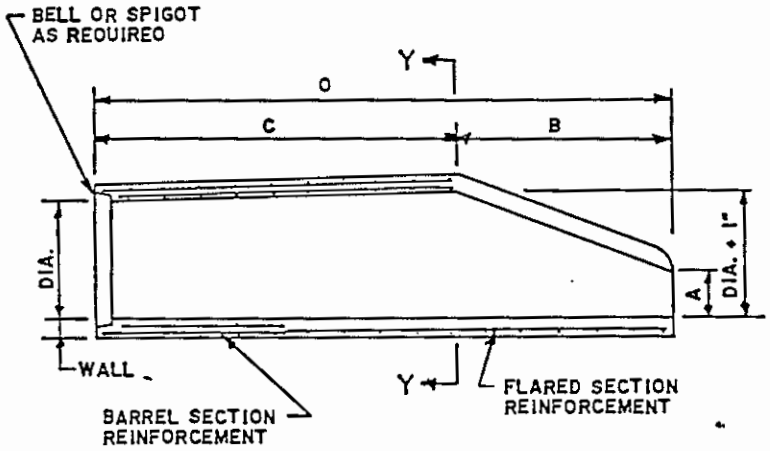

CROSS SECTION

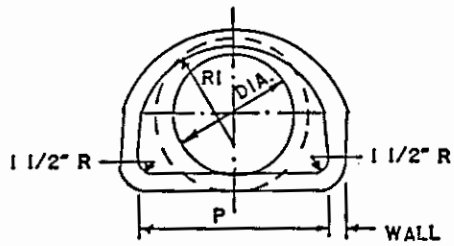

SECTION Y - Y

Dia.	Wall	A	B	C	D	E	P	R1	R2
15	2 1/4"	6"	2'- 3"	3'- 10"	6'- 1"	2'- 6"	24 5/16"	12 1/2"	11"
18	2 1/2"	9"	2'- 3"	3'- 10"	6'- 1"	3'- 0"	29"	15 1/2"	12"
21	2 3/4"	9"	2'-11"	3'- 2"	6'- 1"	3'- 6"	31 5/8"	16 1/8"	13"
24	3"	9 1/2"	3'-7 1/2"	2'- 6"	6'-1 1/2"	4'- 0"	33 3/16"	16 13/16"	14"
30	3 1/2"	1'- 0"	4'- 6"	1'-7 3/4"	6'-1 3/4"	5'- 0"	37"	18 1/2"	15"
36	4"	1'- 3"	5'- 3"	2'-10 3/4"	8'-1 3/4"	6'- 0"	47 13/16"	24 5/16"	20"
42	4 1/2"	1'- 9"	5'- 3"	2'- 11"	8'- 2"	6'- 6"	53 7/8"	27 1/2"	22"
48	5"	2'- 0"	6'- 0"	2'- 2"	8'- 2"	7'- 0'	56 1/2"	28 1/2"	22"
54	5 1/2"	2'- 3"	5'- 5"	2'- 11"	8'- 4"	7'- 6"	65 1/2"	33 1/8"	24"
60	6"	2'- 6"	5'- 0"	3'- 3"	8'- 3"	8'- 0"	72 1/2"	36 11/16"	24"
72	7"	2'- 0"	6'- 6"	1'- 9"	8'- 3"	9'- 0"	77 13/16"	38 15/16"	24"

NOTE

ALL PRECAST CONCRETE PRODUCTS MUST HAVE THE CASTING DATE CLEARLY LABELED ON EACH PRODUCT. NO PRECAST CONCRETE PRODUCT SHALL BE DELIVERED TO THE SITE WITHIN THE SEVEN DAY PERIOD FOLLOWING THE CASTING DATE.

NO.	DESCRIPTION	DATE	APPROVE

REVISIONS

TOWN OF EAST HARTFORD
STANDARD DETAIL

REINFORCED CONCRETE
CULVERT END

DATE: JUNE 1993

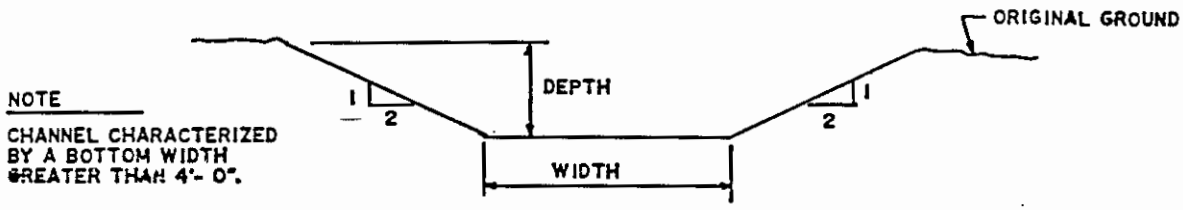

NOTE

CHANNEL CHARACTERIZED BY A BOTTOM WIDTH GREATER THAN 4'- 0".

EARTH DITCH OR CHANNEL

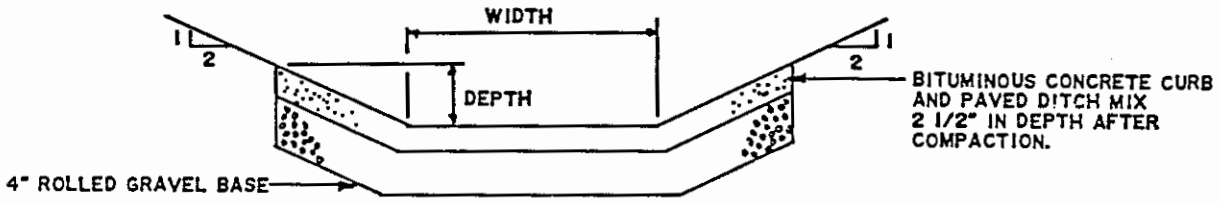

PAVED DITCH OR CHANNEL

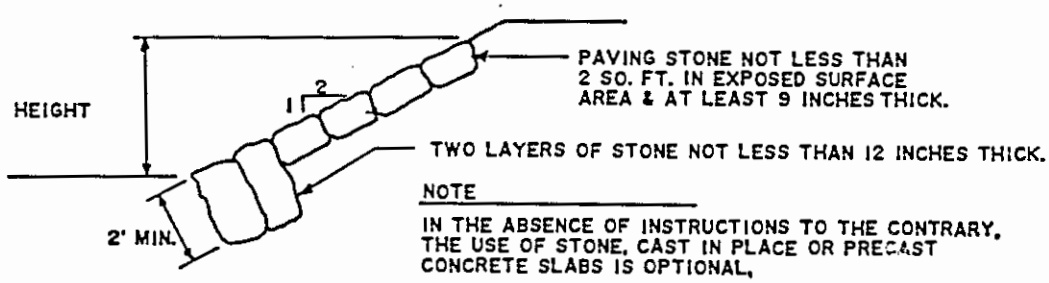

NOTE

IN THE ABSENCE OF INSTRUCTIONS TO THE CONTRARY, THE USE OF STONE, CAST IN PLACE OR PRECAST CONCRETE SLABS IS OPTIONAL.

SLOPE PAVING

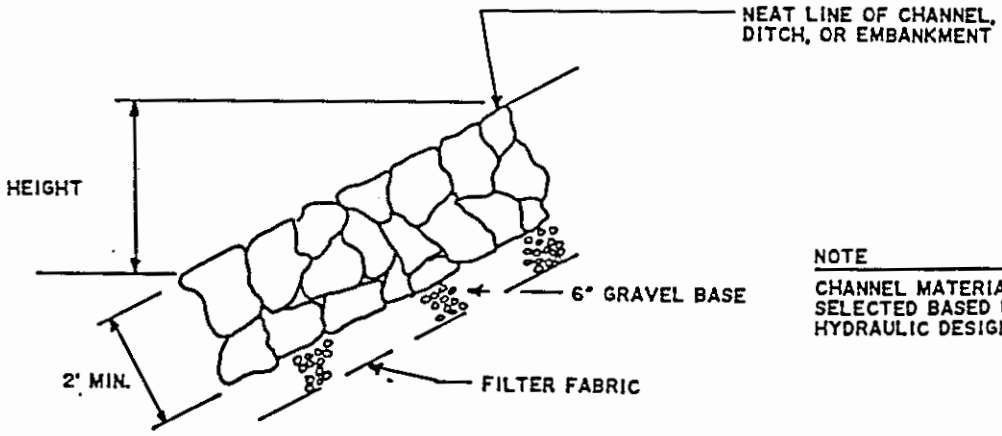

NOTE

CHANNEL MATERIAL WILL BE SELECTED BASED UPON THE HYDRAULIC DESIGN.

RIP RAP

NO.	DESCRIPTION	DATE	APPROVE

REVISIONS

TOWN OF EAST HARTFORD
STANDARD DETAIL

DITCH, CHANNEL AND SLOPE PROTECTION

DATE: JUNE 1993

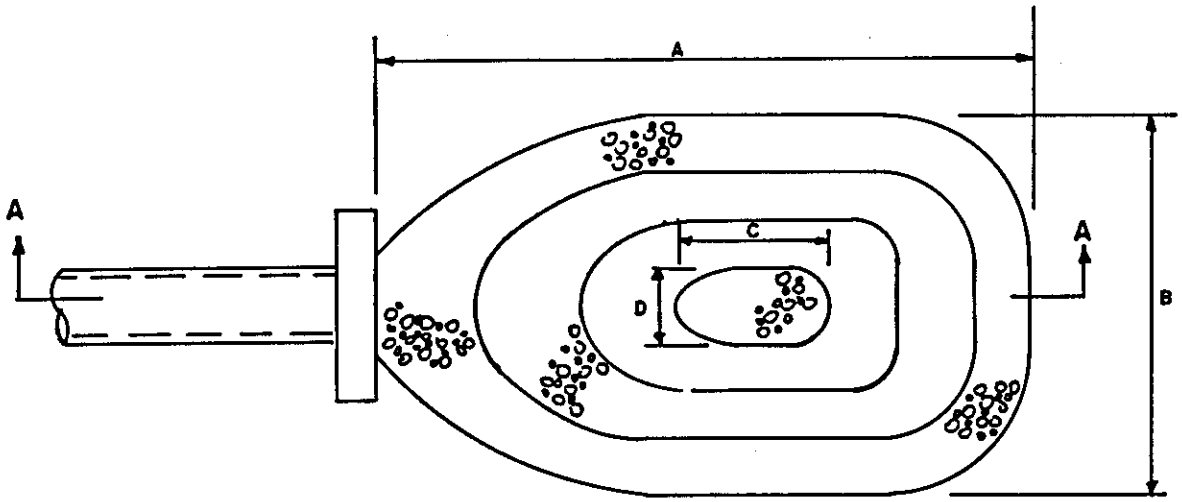

PLAN

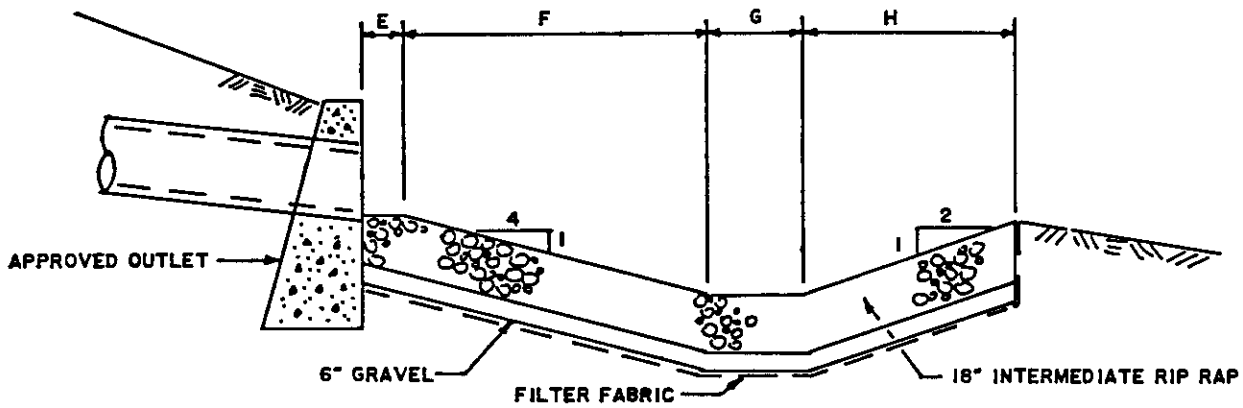

SECTION A-A

PIPE SIZE	A	B	C	D	E	F	G	H	WGT. RIP RAP IN TONS
15"	10'	7'	1 1/2'	1'	1'	4 1/2'	1 1/2'	3'	6
18"	12'	8'	2'	1'	1'	5'	2'	4'	8
21"	13'	9'	2 1/2'	1 1/2'	1'	7'	2 1/2'	4 1/2'	12
24"	17'	10'	2 1/2'	1 1/2'	1'	8'	2 1/2'	5 1/2'	15
30"	20'	13'	3'	2	2'	9'	3'	6'	22
36"	22'	18'	3 1/2'	2'	2'	9 1/2'	3 1/2'	7'	33

NO.	DESCRIPTION	DATE	APPROVE

REVISIONS

TOWN OF EAST HARTFORD
STANDARD DETAIL

RIP RAP PLUNGE POOL

DATE: JUNE 1993

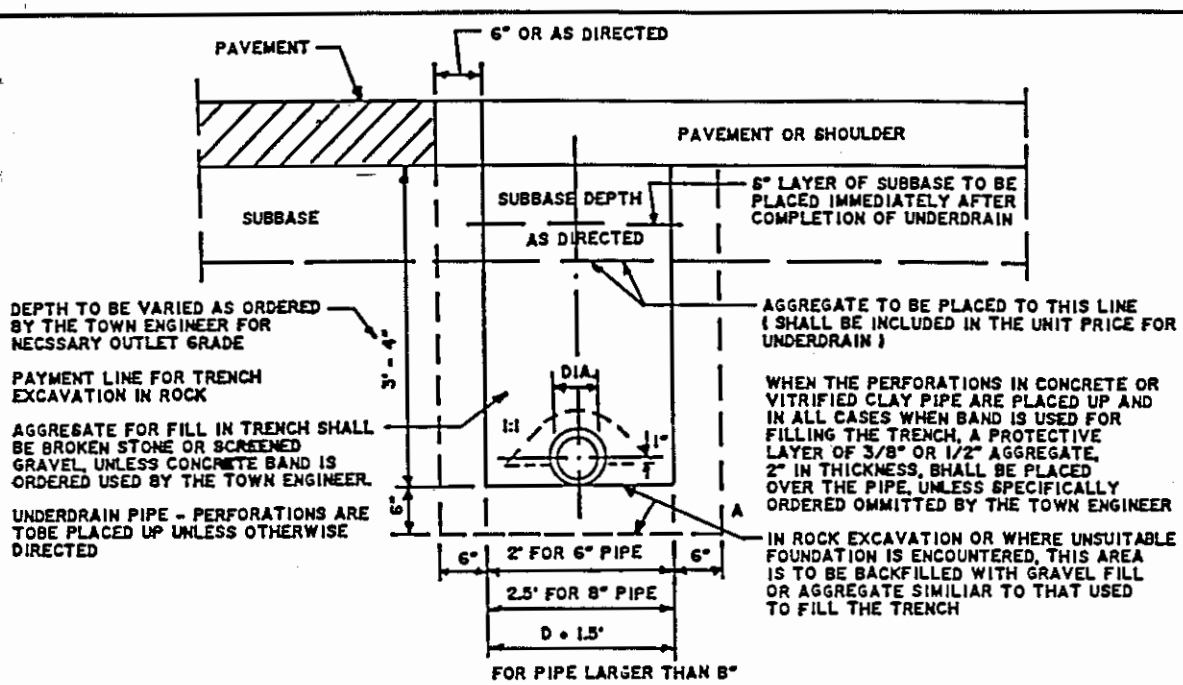

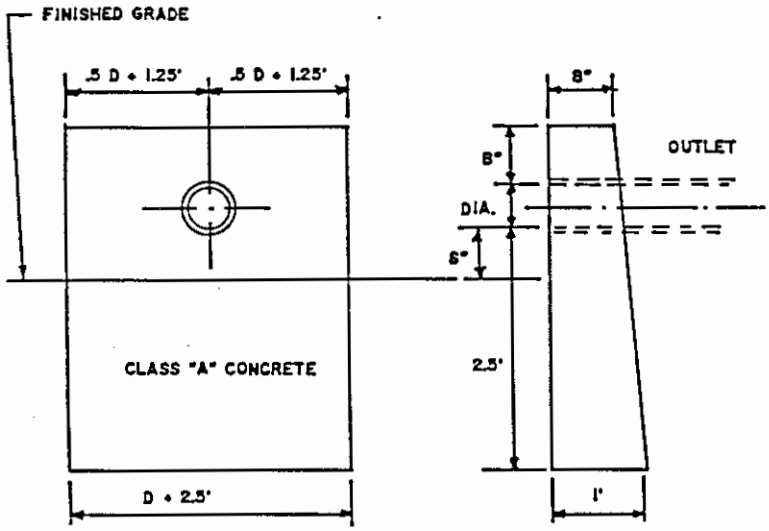

ENDWALL FOR UNDERDRAIN OUTLET

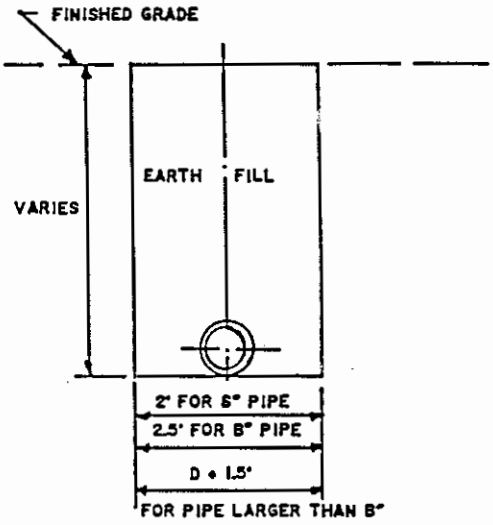

UNDERDRAIN OUTLET

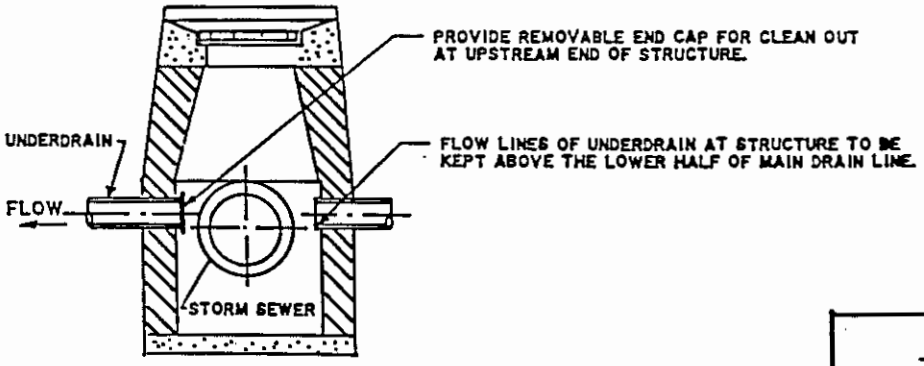

UNDERDRAIN AT CATCH BASIN

NO.	DESCRIPTION	DATE	APPROVE

REVISIONS

TOWN OF EAST HARTFORD
STANDARD DETAIL

UNDERDRAIN

DATE: JUNE 1993

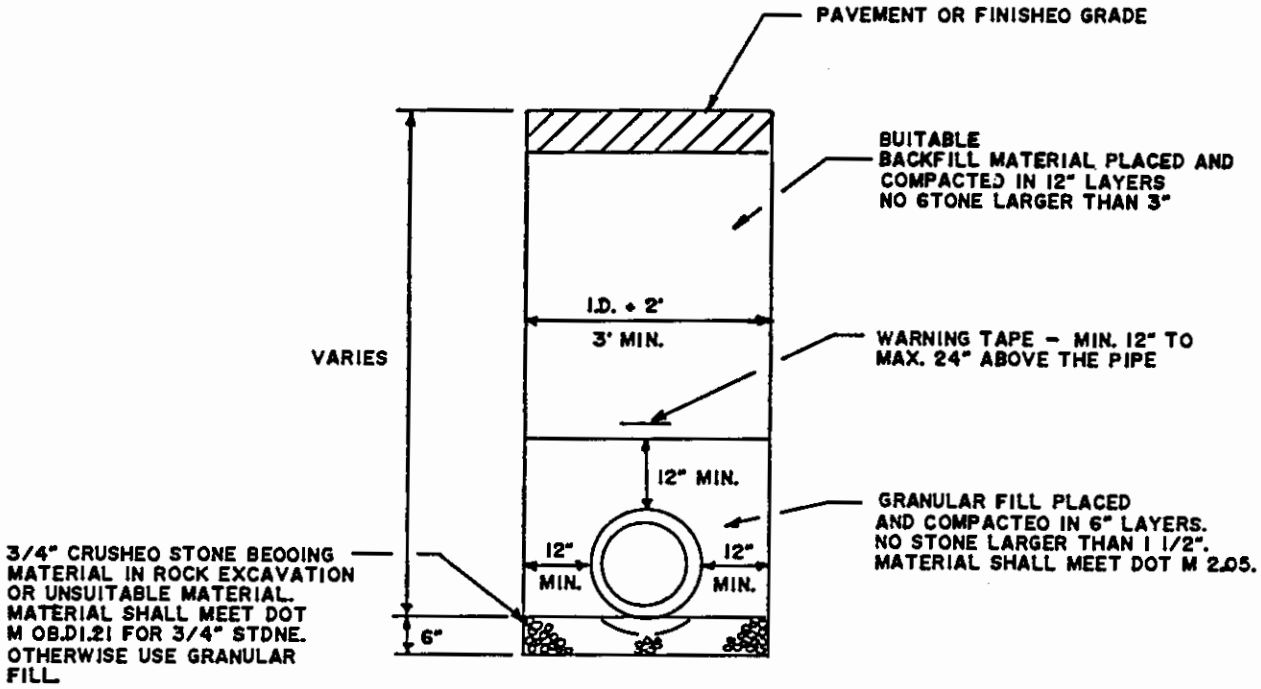

TDWN DF EAST HARTFDRD
STANDARD DETAIL

TYPICAL TRENCH

NO.	OESCRIPTION	OATE	APPROVE

REVISIONS

DATE: JUNE 1993

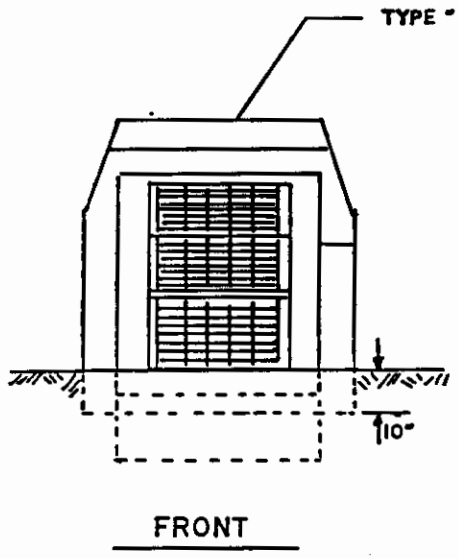

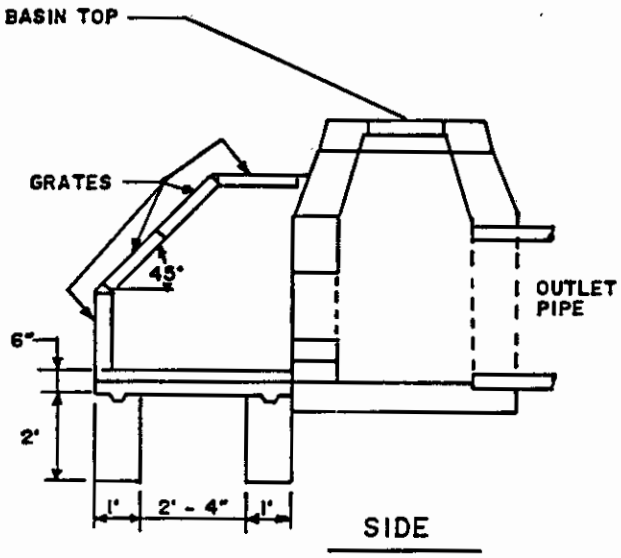

NOTE

1. SIZE AND NUMBER OF OUTLET CONTROLS TO BE DETERMINED BY THE DESIGN ENGINEER.
2. THE OUTLET PIPE FROM THE STRUCTURE IS TO BE A FREE FLOWING CONDITION.

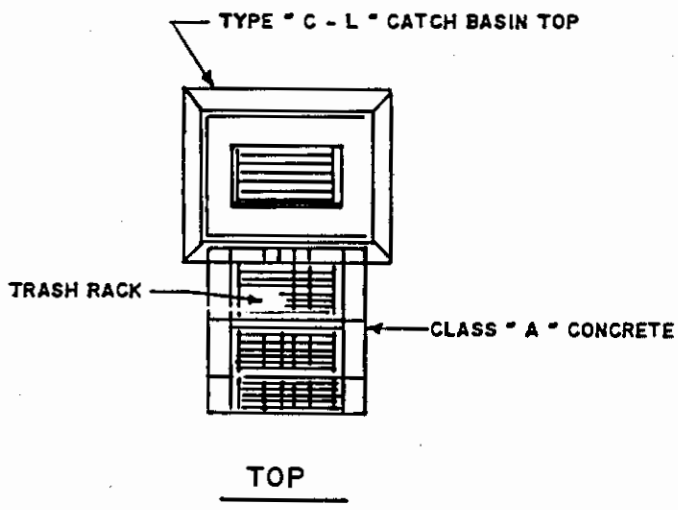

THIS DETAIL IS PROVIDED FOR INFORMATIONAL PURPOSES ONLY.

NO.	DESCRIPTION	DATE	APPROVE

REVISIONS

TOWN OF EAST HARTFORD
STANDARD DETAIL

TYPICAL DETENTION BASIN OUTLET STRUCTURE

DATE: JUNE 1993

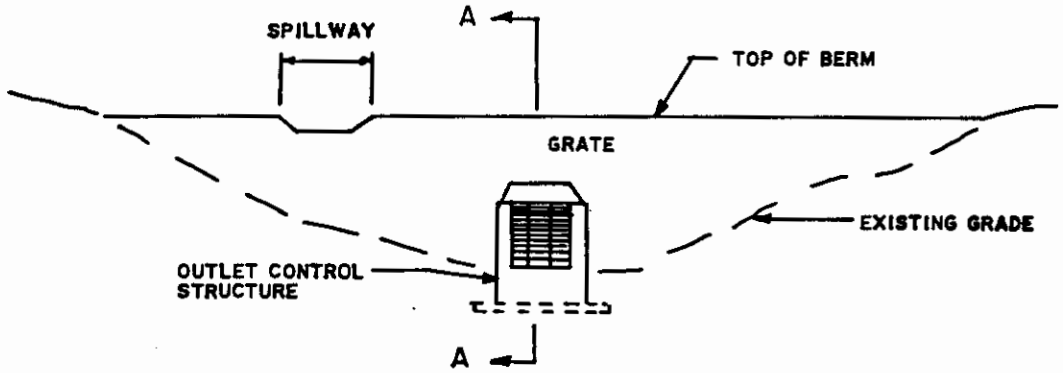

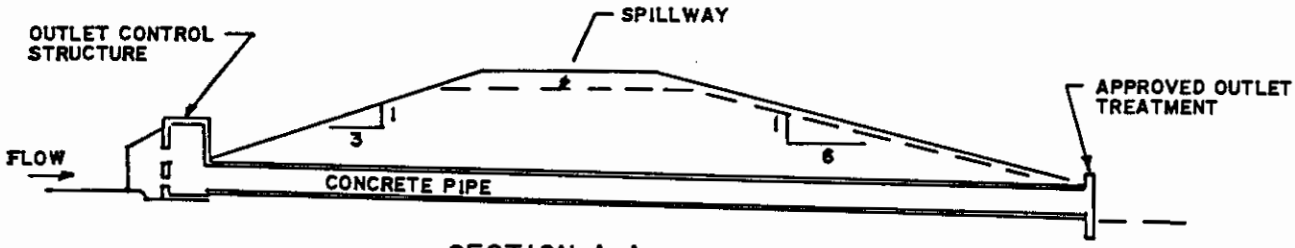

SECTION A-A

NOTE

1. ALL DETENTION BASINS SHALL HAVE A RIP RAP PILOT CHANNEL WITH A MINIMUM SLOPE OF 1.0% TO ENSURE COMPLETE DRAINAGE.
2. THE SPILLWAY SHALL BE DESIGNED TO HANDLE A 100 YEAR STORM INCLUDING SCOUR PROTECTION.
3. CONCRETE ANTI-SEEP COLLARS SHALL BE INSTALLED ALONG THE PIPE FOR BERMS USED FOR DETENTION BASINS.

THIS DETAIL IS PROVIDED FOR INFORMATIONAL PURPOSES ONLY.

NO.	DESCRIPTION	DATE	
	REVISIONS		

TOWN OF EAST HARTFORD
STANDARD DETAIL

TYPICAL DETENTION BASIN DAM

DATE: JUNE 1993

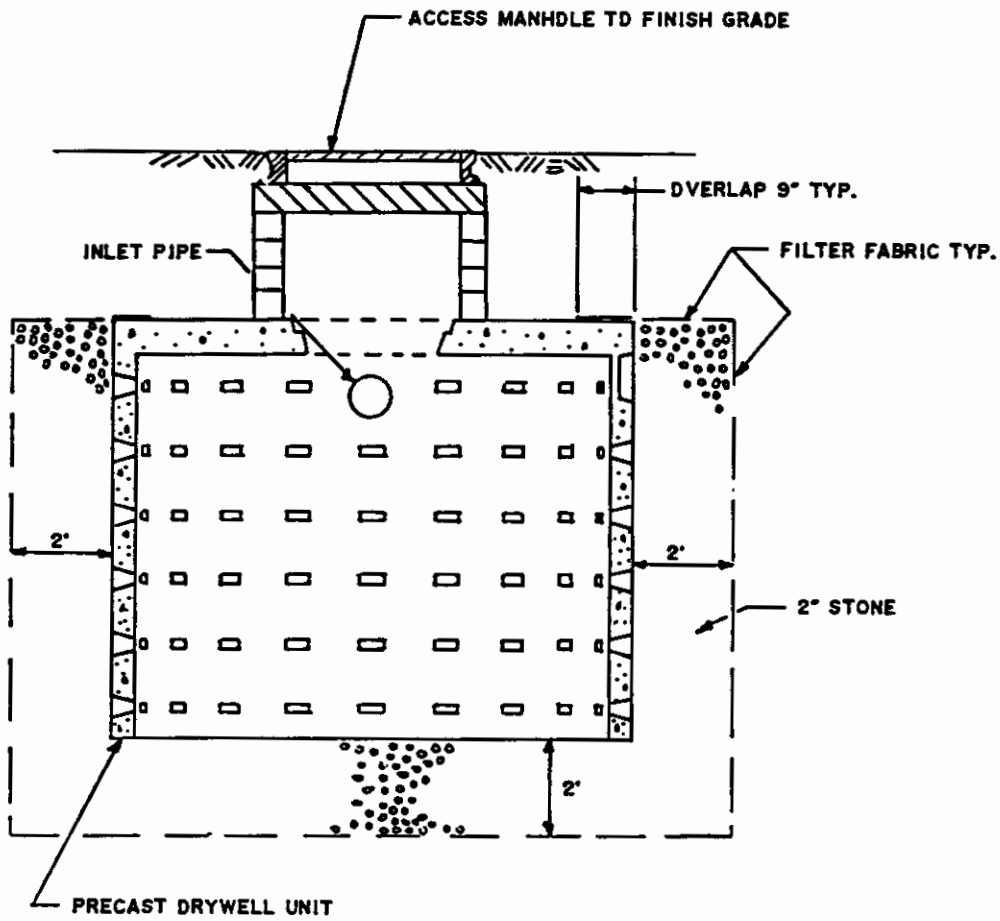

NOTES

1. DRYWELLS LDCATED UNDER PAVEMENT OR IN AREAS DF LOADING SHALL BE DESIGNED FDR HS-20 LOADING.
2. MEASURES SHALL BE INCDRPDRATED IN THE DRYWELL DESIGN TD PREVENT SEDIMENTS FRDM REACHING THE DRYWELL.

ND.	DESCRIPTIONS	DATE	APPRDVE

REVISIDNS

TOWN OF EAST HARTFORD
STANDARD DETAIL

DRYWELL

DATE: JUNE 1993

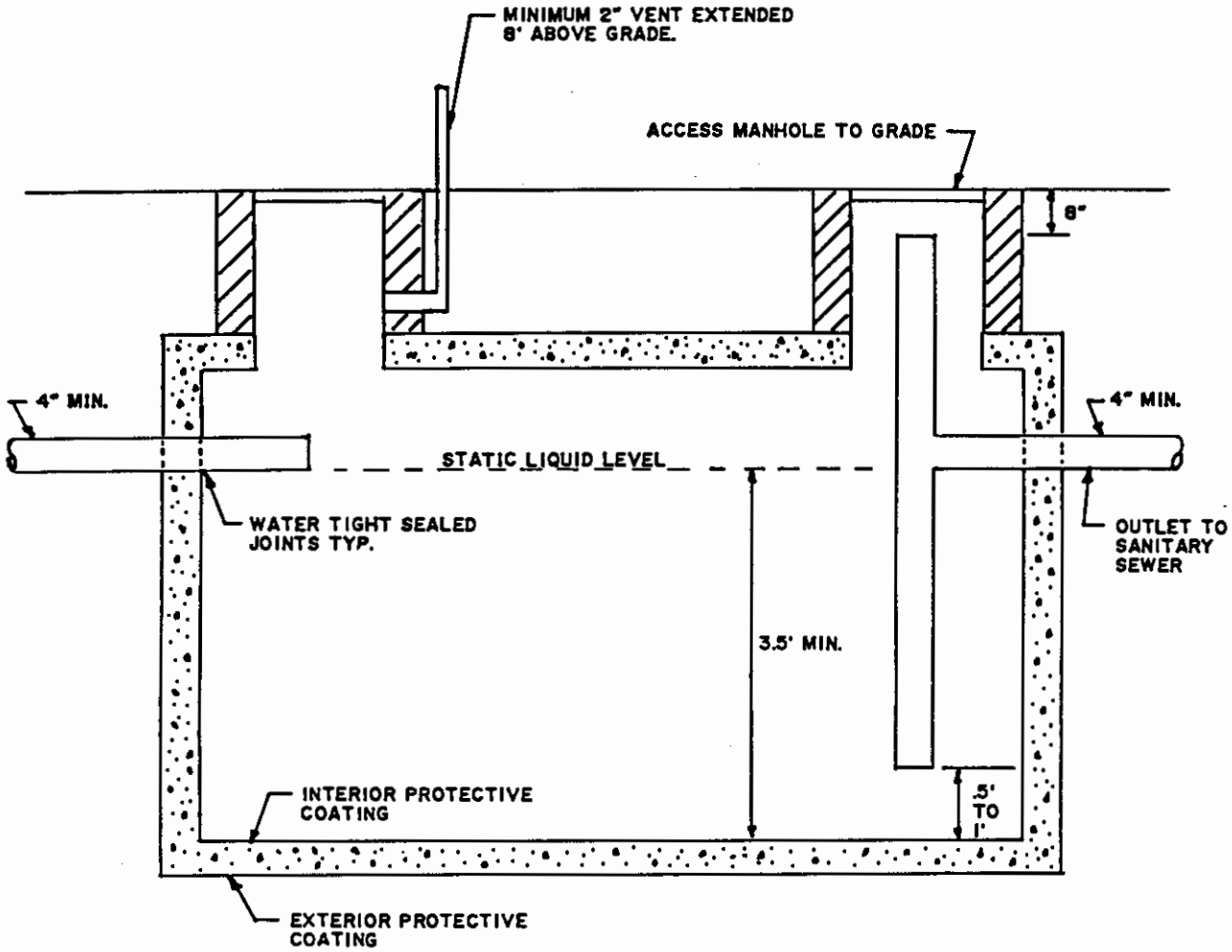

THIS DETAIL IS PROVIDED FOR INFORMATIONAL PURPOSES ONLY. THE DETAILS OF THE DEPARTMENT OF ENVIRONMENTAL PROTECTION MAY SUPERCEED THIS DETAIL.

NOTE

1. MINIMUM TANK CAPACITY SHALL BE 1,000 GALLONS.
2. SEPERATORS LOCATED UNDER PAVEMENT OR IN AREAS OF LOADING SHALL BE DESIGNED FOR HS-20 LOADING.

NO.	DESCRIPTION	DATE	APPROVE

REVISIONS

TOWN OF EAST HARTFORD
STANDARD DETAIL

OIL AND WATER SEPERATOR

DATE: JUNE 1993

1. TRENCH WIOTH OF BALE

EXCAVATE A TRENCH 4" DEEP AND THE WIDTH OF A BTRAW BALE.

2.

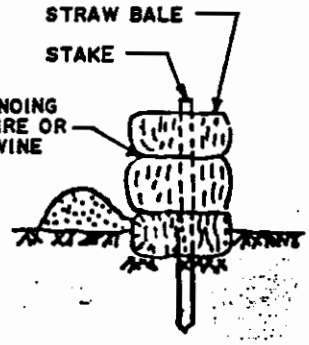

PLACE AND STAKE STRAW BALES, TWO STAKES PER BALE.

3.

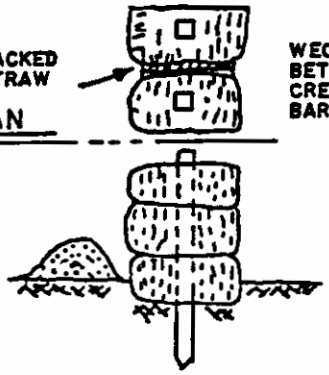

WEDGE LOOSE STRAW BETWEEN BALES TO CREATE A CONTINUOUS BARRIER.

4.

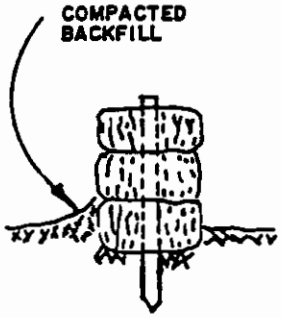

BACKFILL AND COMPACT THE EXCAVATED SOIL AS SHOWN ON THE UPHILL SIDE OF THE BARRIER TO PREVENT PIPING.

ELEVATION: POINTS A SHOULD BE HIGHER THAN POINTS B

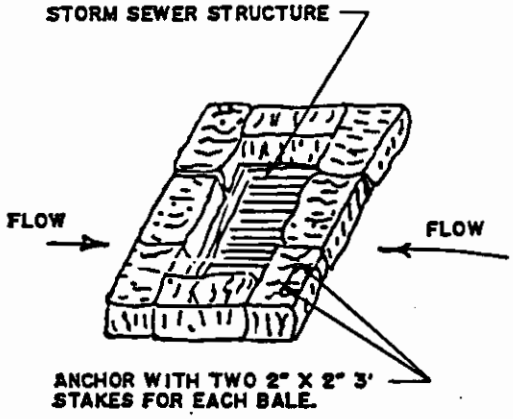

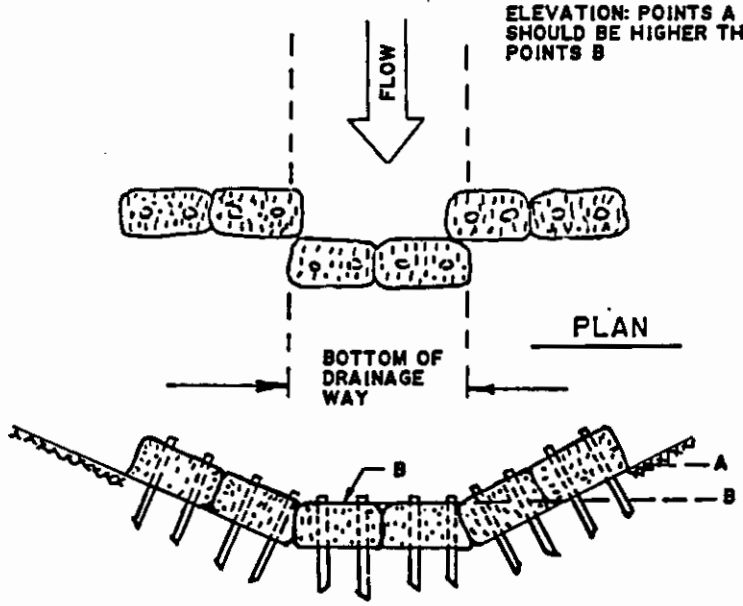

HAYBALE INSTALLATION AT CATCH BASINS

NO.	DESCRIPTION	DATE	APPROVE

REVISIONS

TOWN OF EAST HARTFORD
STANDARD DETAIL

EROSION CONTROL
HAYBALE

DATE: JUNE 1993

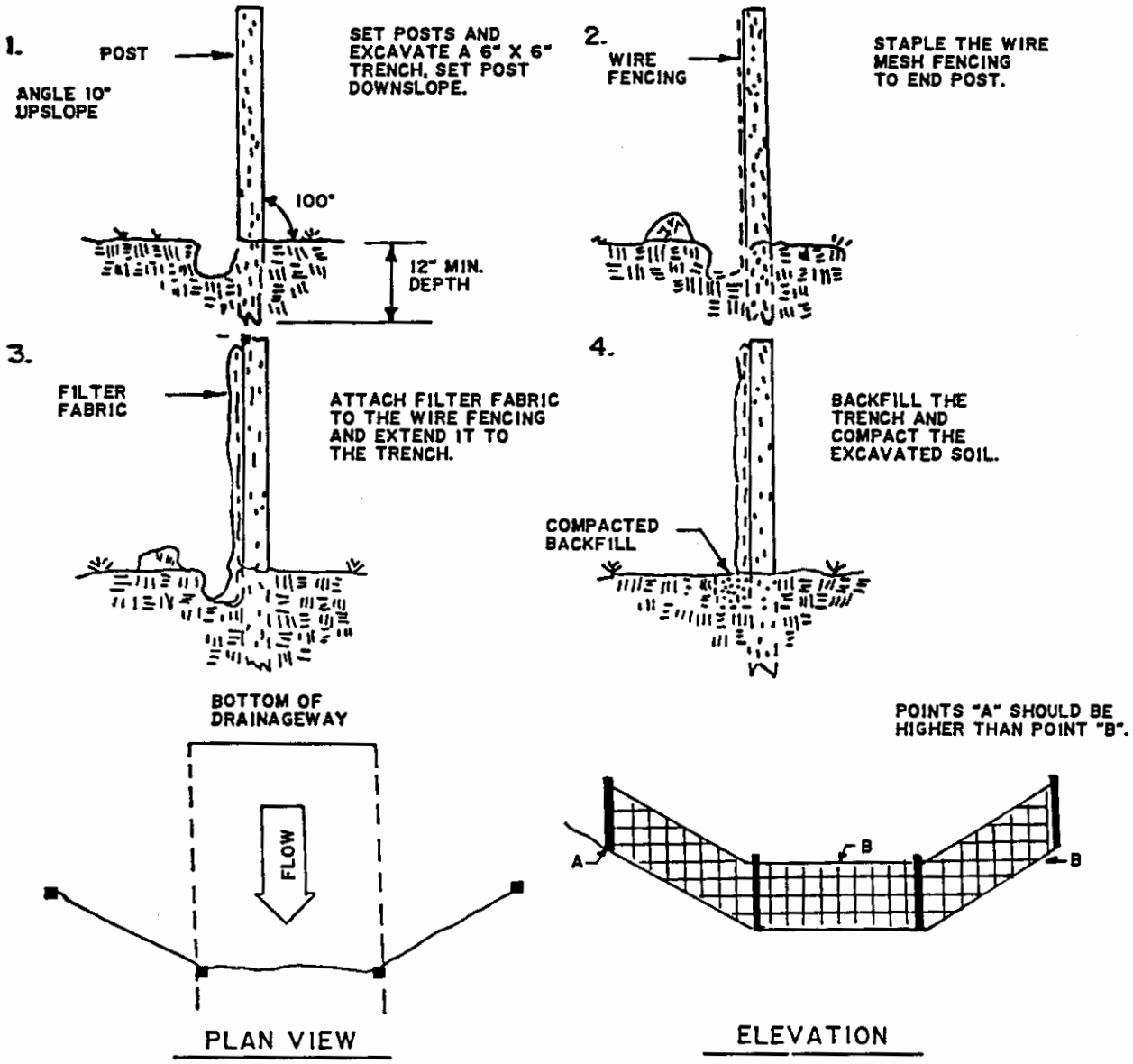

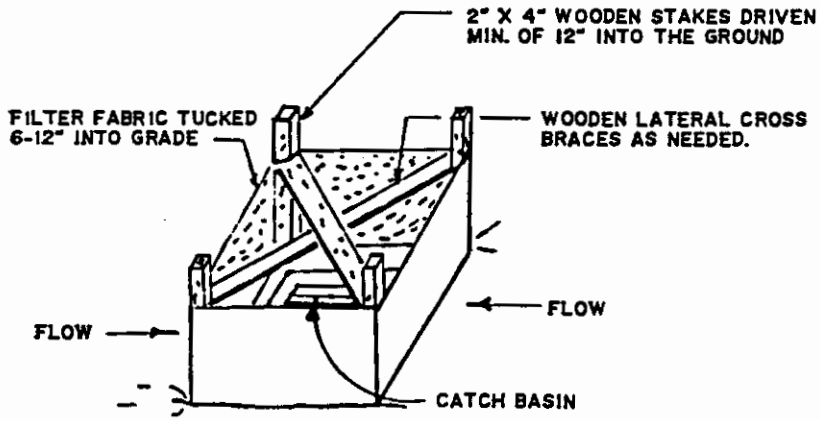

SILT FENCE INSTALLATION AT CATCH BASINS

NO.	DESCRIPTION	DATE	APPROVE

REVISIONS

TOWN OF EAST HARTFORD
STANDARD DETAIL

EROSION CONTROL
SILT FENCE

DATE: JUNE 1993

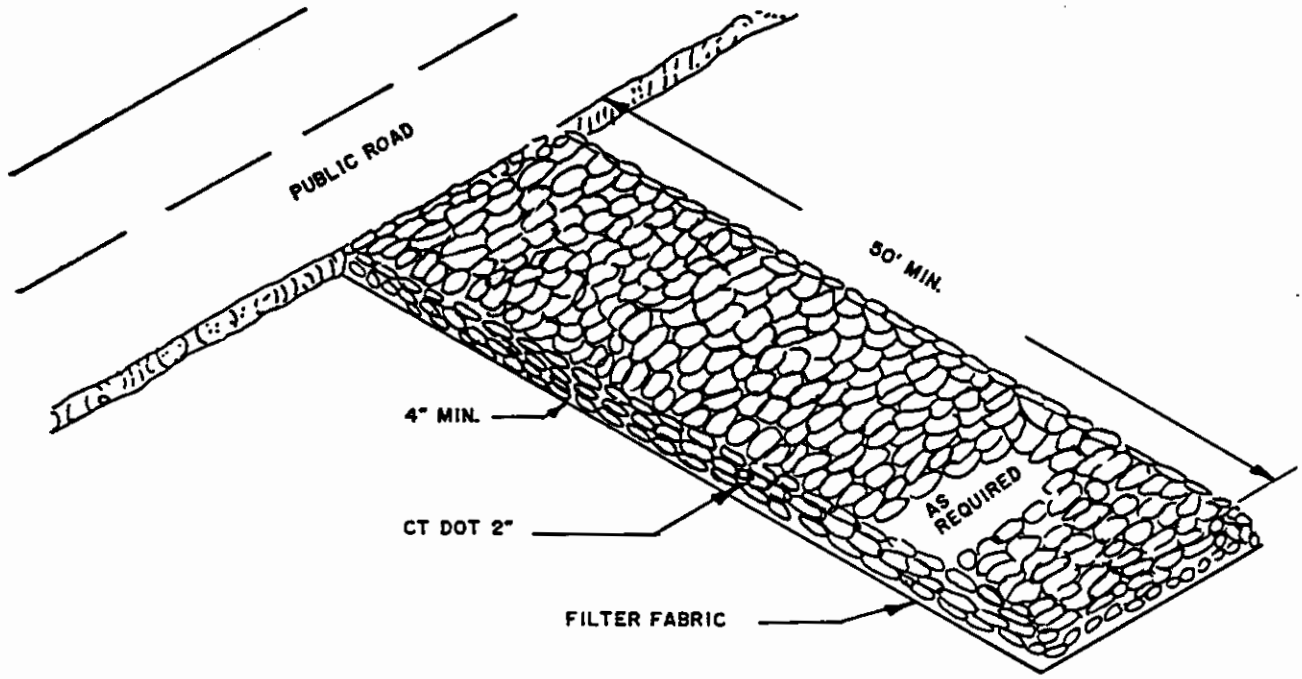

CONSTRUCTION ENTRANCE

NO.	DESCRIPTION	DATE	APPROVE

REVISIONS

TOWN OF EAST HARTFORD
STANDARD DETAIL

CONSTRUCTION ENTRANCE

DATE: JUNE 1993

TOWN OF EAST HARTFORD
DESIGN MANNUAL

APPENDIX C

DRAINAGE DESIGN FORMS AND DESIGN AIDS

Table of Contents

Rainfall Intensity Charts

Hartford County C – 1
SCS 24 hour Storm C – 2

Time of Concentration Charts

Seelye Chart C – 3
Kirpich Chart C – 4

Culvert Computation Forms C – 5 to C – 6

Summary of Water Surface Profiles C – 7

Gutter Flow Charts C – 8

Instructions for Use of Hydraulic Capacity of Crate Inlet in a Sump C – 9 to C – 10

Hydraulic Capacity of Grate inlet in a Sump C – 11

Gutter Flow Analysis

Directions for Form C – 12 to C – 13
Computation Form C – 14

Storm Sewer Systems Design

Directions for Form C – 15
Computation Form C – 16

Ditch and Channel Analysis

Directions for Overland Flow Analysis Form C – 17
Overland Flow Analysis for Ditch Design C – 18
Directions for Ditch and Channel Design C – 19
Ditch and Channel Design Form C – 20

RAINFALL INTENSITY CHART IN INCHES PER HOUR
HARTFORD, CT

STORM (YRS)	MINUTES																											
	5	6	7	8	9	10	11	12	13	14	15	16	17	18	19	20	21	22	23	24	25	26	27	28	29	30	31	32
2	4.1	3.8	3.6	3.4	3.2	3.1	3.0	2.9	2.8	2.6	2.5	2.4	2.3	2.3	2.2	2.2	2.1	2.1	2.0	2.0	1.9	1.9	1.8	1.8	1.7	1.7	1.7	1.7
10	6.2	5.6	5.4	5.3	5.0	4.7	4.5	4.4	4.3	4.1	4.0	3.9	3.8	3.7	3.5	3.4	3.3	3.3	3.2	3.2	3.1	3.0	2.9	2.9	2.8	2.7	2.6	2.6
25	7.1	6.7	6.4	6.1	5.7	5.6	5.4	5.2	5.0	4.9	4.7	4.5	4.4	4.3	4.2	4.1	4.0	4.0	3.9	3.8	3.7	3.6	3.5	3.5	3.4	3.3	3.2	3.2
50	7.7	7.4	7.0	6.7	6.5	6.1	6.0	5.8	5.6	5.4	5.2	5.1	5.0	4.9	4.7	4.6	4.5	4.4	4.3	4.3	4.2	4.1	4.0	3.9	3.8	3.7	3.6	3.6
100	8.4	8.0	7.6	7.3	7.0	6.8	6.6	6.4	6.2	6.0	5.8	5.6	5.4	5.2	5.1	5.0	4.9	4.8	4.7	4.6	4.5	4.4	4.3	4.2	4.1	4.0	3.9	3.8

STORM (YRS)	MINUTES																											
	33	34	35	36	37	38	39	40	41	42	43	44	45	46	47	48	49	50	51	52	53	54	55	56	57	58	59	60
2	1.6	1.6	1.6	1.5	1.5	1.5	1.4	1.4	1.4	1.3	1.3	1.3	1.3	1.3	1.2	1.2	1.2	1.2	1.2	1.2	1.2	1.2	1.2	1.2	1.1	1.1	1.1	1.1
10	2.6	2.5	2.5	2.5	2.4	2.4	2.3	2.3	2.3	2.2	2.2	2.1	2.1	2.1	2.0	2.0	2.0	2.0	1.9	1.9	1.9	1.9	1.8	1.8	1.8	1.8	1.8	1.8
25	3.1	3.1	3.0	3.0	2.9	2.9	2.8	2.8	2.7	2.6	2.5	2.5	2.5	2.5	2.4	2.4	2.4	2.4	2.3	2.3	2.2	2.2	2.2	2.2	2.2	2.1	2.1	2.1
50	3.5	3.4	3.3	3.3	3.2	3.2	3.1	3.1	3.0	3.0	2.9	2.9	2.8	2.8	2.8	2.7	2.7	2.7	2.6	2.6	2.5	2.5	2.4	2.4	2.4	2.4	2.4	2.3
100	3.8	3.7	3.7	3.6	3.6	3.6	3.5	3.5	3.4	3.4	3.3	3.3	3.2	3.2	3.2	3.1	3.1	3.0	2.9	2.9	2.8	2.8	2.7	2.7	2.7	2.7	2.6	2.6

SCS - 24 Hour Rainfall Event

2 year event - 3.2 inches

5 year event - 4.2 inches

10 year event - 4.9 inches

25 year event - 5.6 inches

50 year event - 6.4 inches

100 year event - 7.0 inches

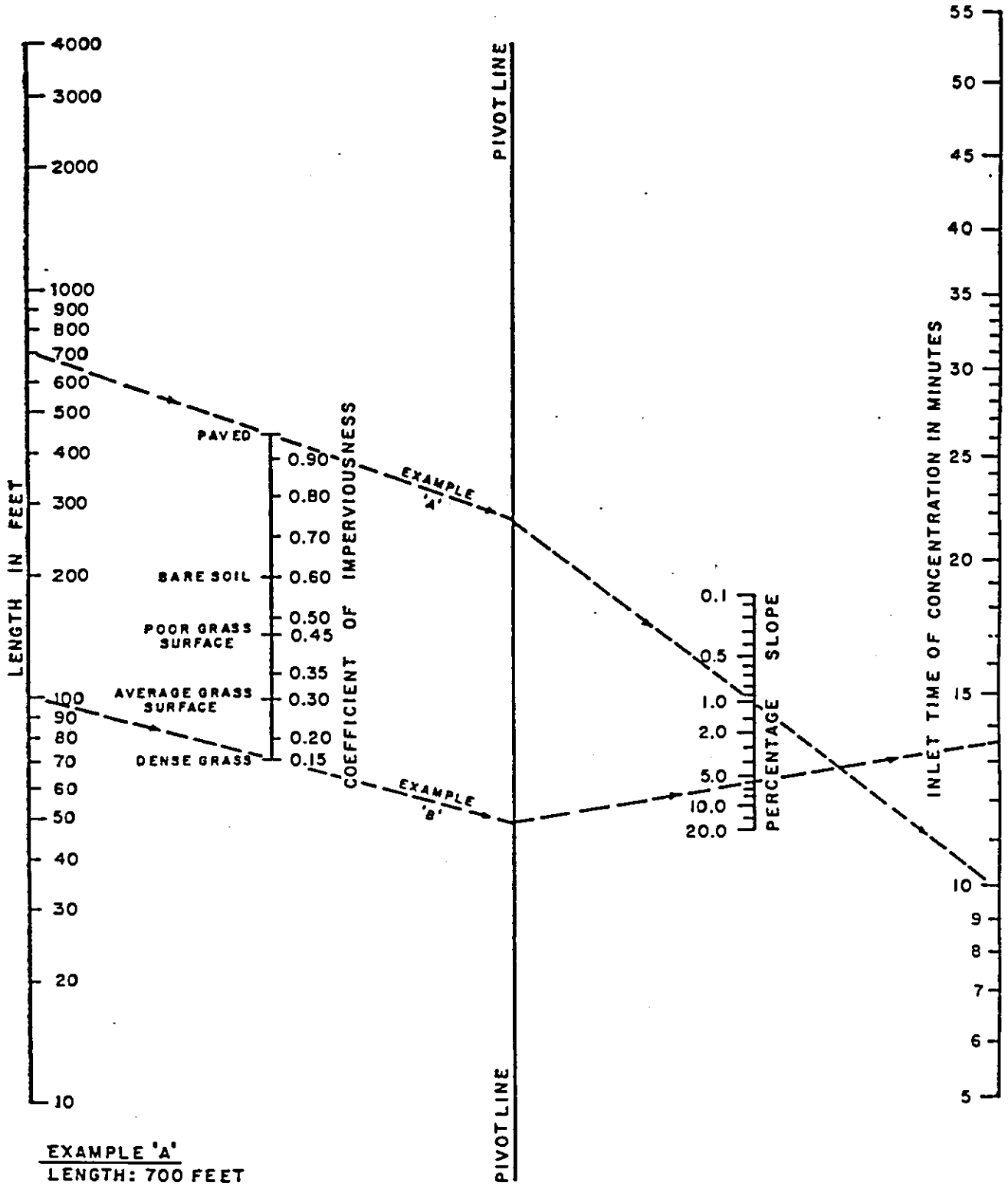

EXAMPLE 'A'
LENGTH: 700 FEET
PAVED
SLOPE: 1.0 %
TIME: 10 MINUTES

EXAMPLE 'B'
LENGTH: 100 FEET
DENSE GRASS
SLOPE: 6.0 %
TIME: 13 ½ MINUTES

SEELYE CHART

TIME OF CONCENTRATION

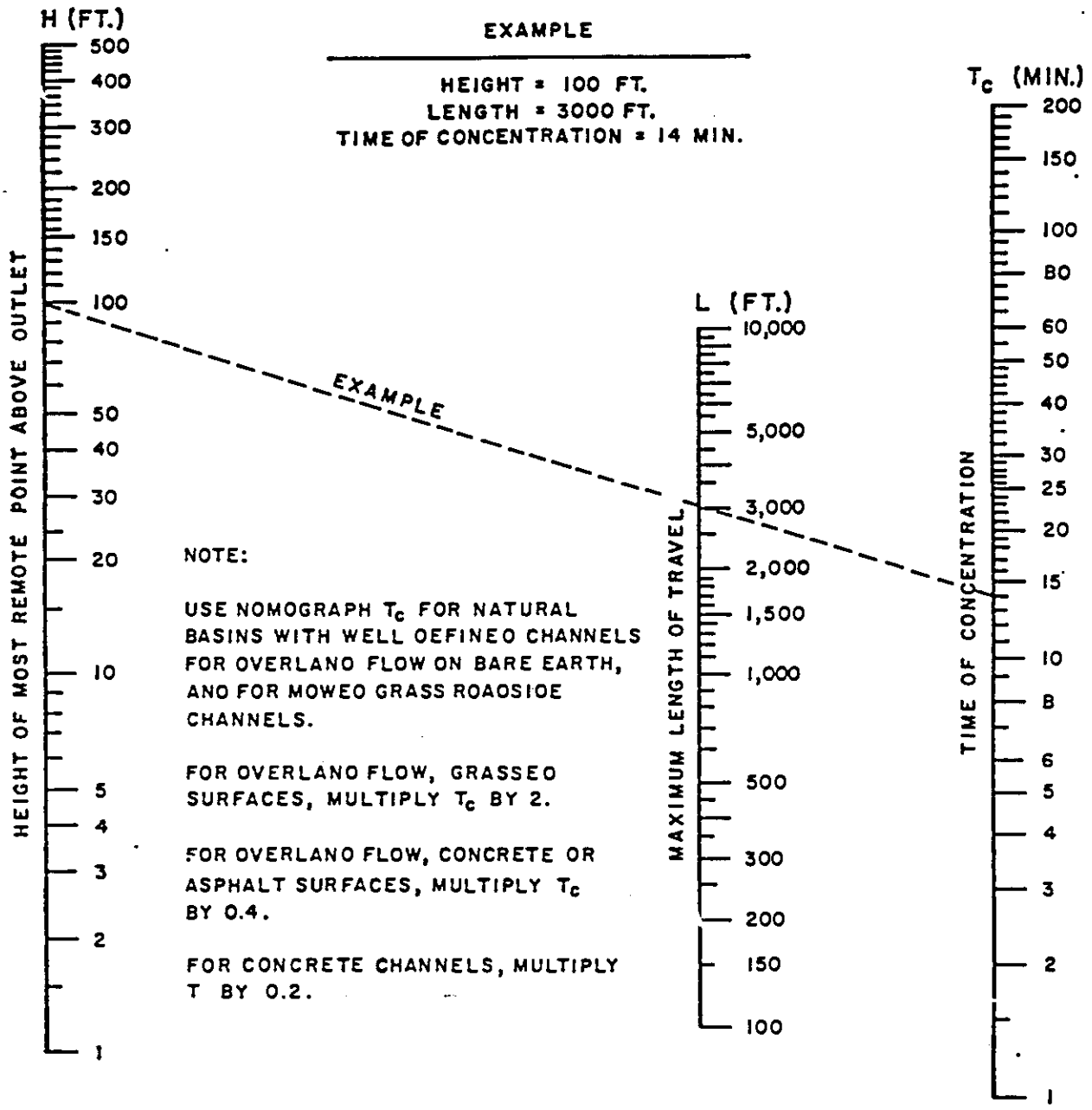

KIRPICH CHART

TIME OF CONCENTRATION

CULVERT COMPUTATIONS

Designed By: Date:
Checked By: Date:

Project_____
Roadway_____
Location_____

DRAINAGE AREA

a) Total area_____Acres
b) Above storage_____Acres
c) Effective area_____Acres
d) Special considerations_____
_____
e) Existing culverts_____

DESIGN DISCHARGE_____C.F.S. for _____Year Frequency

a) SCS method_____CFS
b) Gauge - Data Prediction Method_____CFS
c) Rational Formula_____CFS
d) Remarks_____
_____

HYDRAULIC DATA

a) Size_____Type_____
b) Maximum permissible headwater elevation_____
c) Headwater control_____
_____
d) Elevation of channel bet at outlet_____
e) Length_____Ft. and Slope_____
Ft./Ft. of Culvert_____
f) Entrance invert elevation_____

MISCELLANEOUS DATA

a) Height of overfill_____
b) Strength Requirements_____Gauge (Corr. Str. Plate) (ACCMP)
or_____Class RCP
c) End treatment_____
_____
d) Entrance Channel_____
e) Outlet Channel_____
f) Bank Protection_____
_____

CULVERT COMPUTATIONS

Project_____
Watercourse_____
Roadway_____

Designed by_____ _____
Checked by_____
Sheet_____of_____

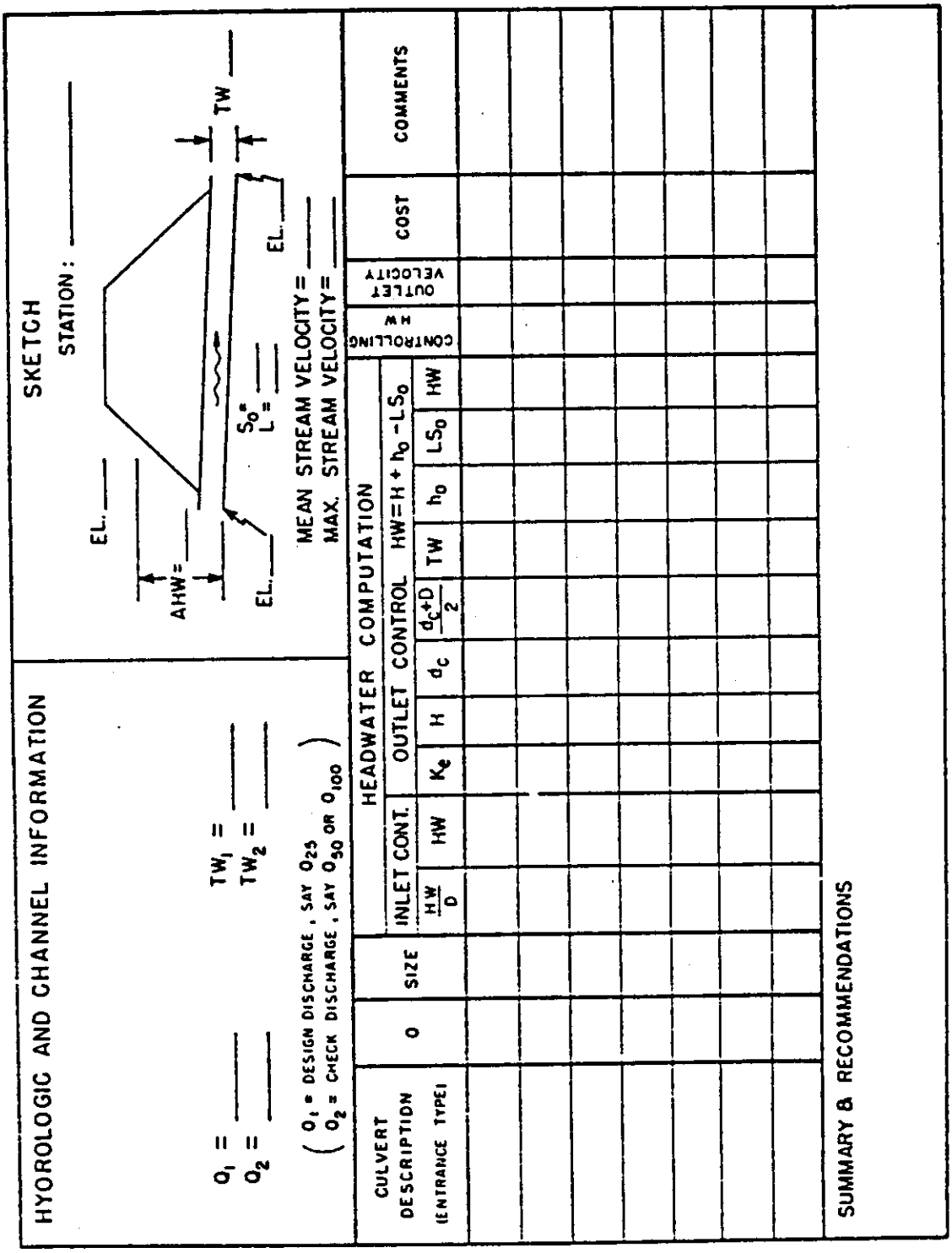

Source: Federal Highway Administration, Hydraulic Engineering Circular No. 5

SUMMARY-COMPUTATION OF WATER SURFACE PROFILE

Project_____
Watercourse_____

Designed by_____
Checked by_____
Sheet_____of_____

STATION (ELEVATION)	LENGTH OF REACH	AREA (ZONE OR TOTAL)	HYDRAULIC RADIUS (ZONE OR TOTAL)	n	FRICTION SLOPE REQ'D FOR Q_{design}	AVERAGE FRICTION SLOPE	FRICTION LOSS IN REACH	VELOCITY OF Q_{design} (ZONE OR TOTAL)	DISCHARGE (ZONE OR TOTAL)	VELOCITY HEAD (h)	DIFFERENCE IN VELOCITY HEADS (h1-h2)	OTHER LOSSES	TOTAL HEAD	WATER SURFACE ELEVATION	ELEVATION OF ENERGY GRADIENT

Source: Conn. DOT, Bureau of Highways, Drainage Manual

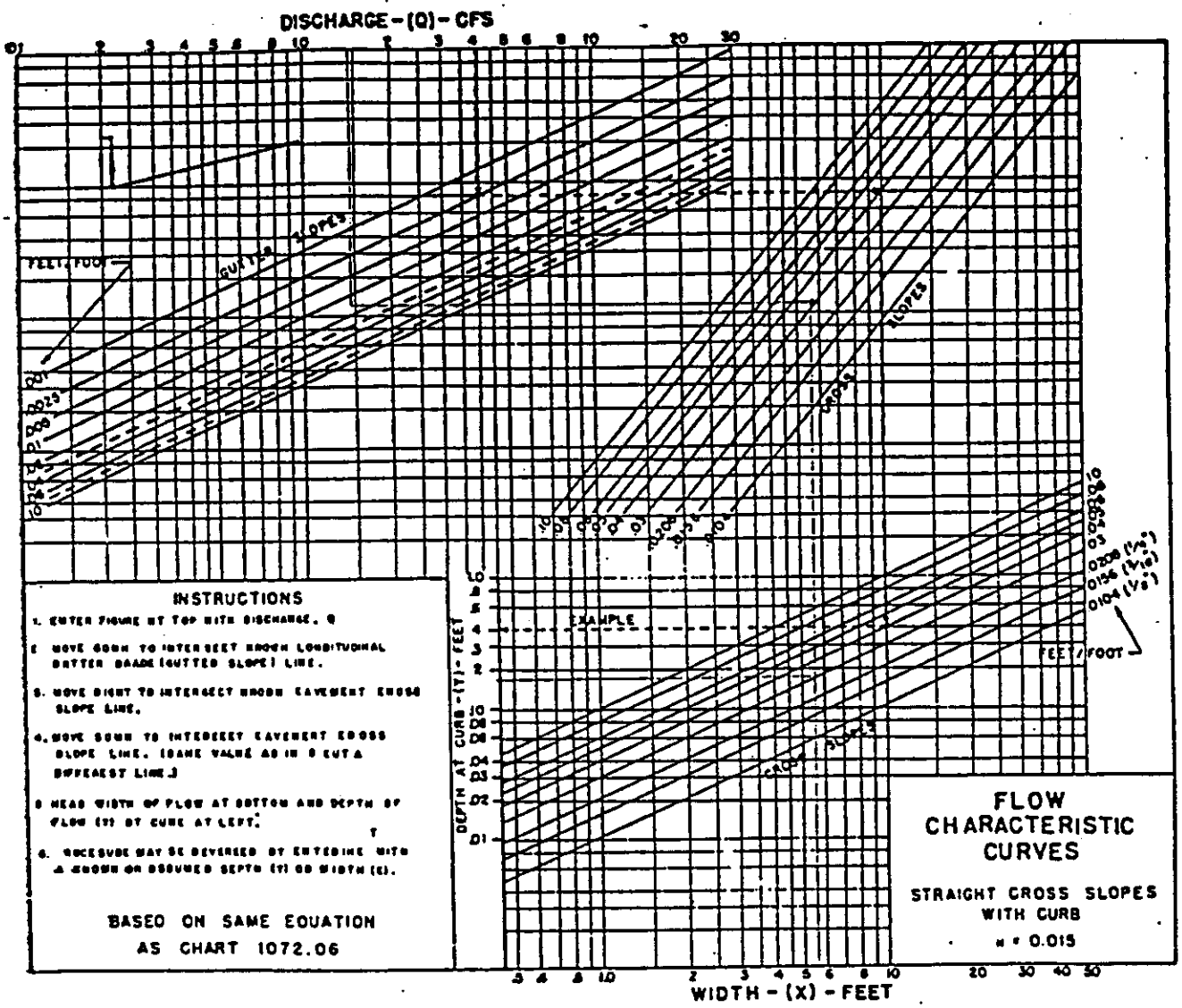
DISCHARGE - (Q) - CFS
GUTTER SLOPES
FEET/FOOT
SLOPES
EXAMPLE
DEPTH AT CURB - (T) - FEET
WIDTH - (X) - FEET
FLOW CHARACTERISTIC CURVES
STRAIGHT CROSS SLOPES WITH CURB
n = 0.015
INSTRUCTIONS
1. ENTER FIGURE AT TOP WITH DISCHARGE, Q
2. MOVE DOWN TO INTERSECT KNOWN LONGITUDINAL GUTTER GRADE (GUTTER SLOPE) LINE.
3. MOVE RIGHT TO INTERSECT KNOWN PAVEMENT CROSS SLOPE LINE.
4. MOVE DOWN TO INTERSECT PAVEMENT CROSS SLOPE LINE. (SAME VALUE AS IN 3 CUT A DIFFERENT LINE.)
5. READ WIDTH OF FLOW AT BOTTOM AND DEPTH OF FLOW (T) BY CURVE AT LEFT.
6. PROCEDURE MAY BE REVERSED BY ENTERING WITH A KNOWN OR ASSUMED DEPTH (T) OR WIDTH (X).
BASED ON SAME EQUATION AS CHART 1072.06

INSTRUCTIONS FOR USE OF HYDRAULIC CAPACITY OF GRATE INLET IN A SUMP

The chart applies only when the grate is located in a low point or sump where the water will pond at the grate.

The capacity of the grate depends upon wither the exposed perimeter of the area of the openings and the depth of water at the grate. Recent experiments have determined that a grate will act as a weir and follow the weir formula for depths (heads) on the grate up to 0.4 ft. It will act as an orifice and follow the orifice formula for heads of 1.4 ft. and over. For heads between 0.4 and 1.4 ft. the operation is indefinite because of vortices and eddies over the grate.

In the usual problem, the following are given:

1. A particular design of grate with dimensions.
2. A design discharge (Q) or information as to drainage area, rainfall intensities and runoff coefficients from which a design discharge can be estimated.

PROCEDURE

1. Compute the perimeter of the grate opening (P) ignoring the bars and omitting any side over which the water does not enter, such as when one side is against the face of a curb. Divide the result by 2. This allows for partial clogging of the grate by assuming that only half of the perimeter will be effective.

2. Compute the Q/P ratio, using effective perimeter after allowing for clogging.

3. Compute the total area of clear opening (A), excluding area taken up by bars, and divided by 2. This allows for partial clogging of the grate by assuming that only half of the area will be effective.

4. Compute the Q/A ratio, using effective area after allowing for clogging.

5. Enter the chart at the bottom scale, using line (a) with the Q/P value and line (b) with the Q/A value, and read the required head in feet at the left margin.

6. If the required head falls below 0.4, (a) only will apply. This is the usual case.

7. If the required head falls above 1.4 feet., (b) only will apply.

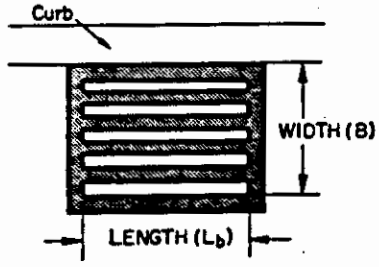

$P = 2B + L_b$

A = AREA OF CLEAR OPENING IN GRATE TO ALLOW FOR CLOGGING DIVIDE P OR A BY 2 BEFORE OBTAINING d.

WITHOUT CURB $P = 2(B + L_b)$

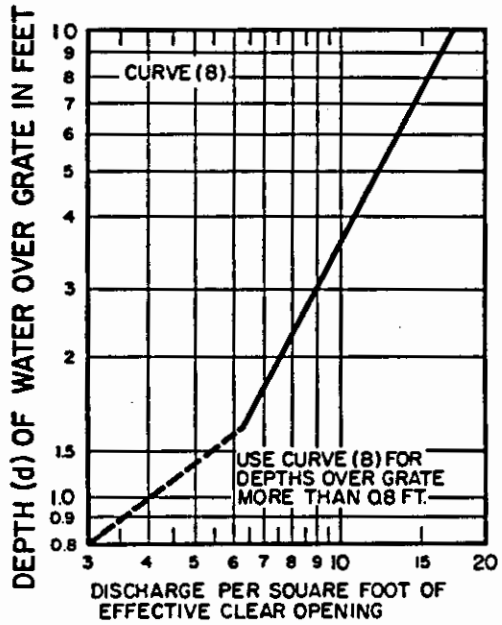

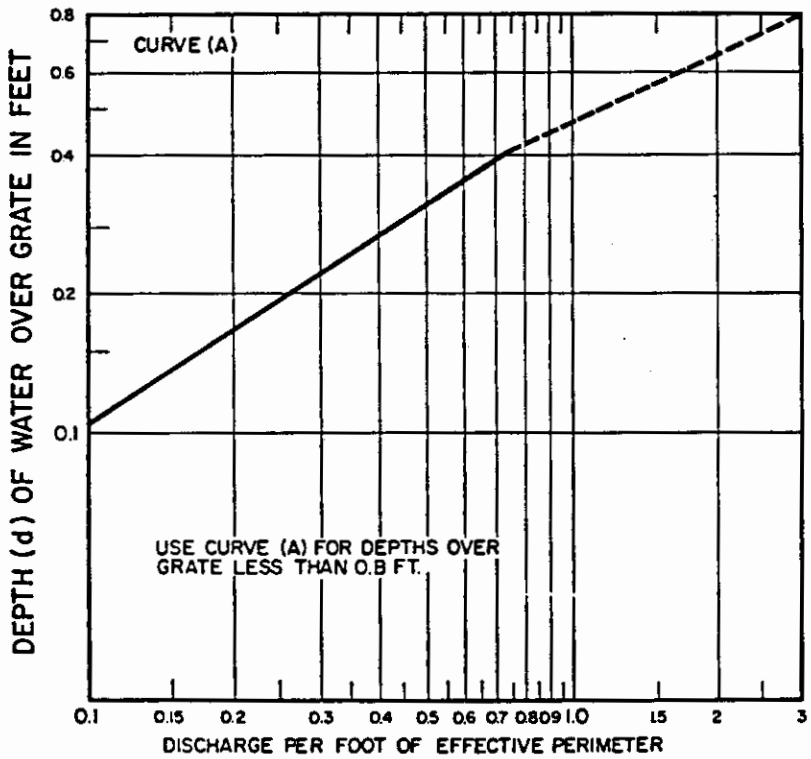

BUREAU OF PUBLIC ROADS
REV. AUG. 1968

HYDRAULIC CAPACITY OF GRATE INLET IN SUMP

ROADWAY SURFACE DRAINAGE

DIRECTIONS FOR GUTTER FLOW ANALYSIS FORM

ENGINEERING DEPARTMENT

Inlet capacity for structures on grades will be determined on the assumption that the portion of the gutter flow within the width of the grate will be intercepted. The remainder of the flow in the width of gutter outside the grate will be assumed to bypass the structure.

1. Inlet Number - Identifying symbol for inlet.

2. Time to Inlet - Time required for surface flow to concentrate at inlet.

3. Area in Acres - Area contributing runoff to inlet.

4. Runoff Coefficient (C) - Coefficient of area contributing to inlet.

5. AC - The product of the area and the runoff coefficient.

6. Sum of AC - The sum of the AC for the inlet.

7. Total AC - The AC bypassing the previous inlet and the AC for the inlet. 6 + 15 = 7.

8. Rainfall Intensity (I) - The intensity determined by the Time of Inlet, 2.

9. Q to Inlet - The product of the Total AC, 7, and the Rainfall Intensity, 8. Q=ACI.

10. Grade to Gutter - Grade to be expressed in feet per foot.

11. Cross Slope of Shoulder - Slope to be expressed in feet per foot.

12. Depth of Flow - Depth of water at gutter.

13. Width of Flow - The width the water will flow in the shoulder or travelway.

14. Q Bypassing Inlet - The portion of flow that is beyond the width of the grate will be used to determine the bypass Q.

15. AC Bypassing Inlet - Determined by dividing the "Q Bypassing Inlet", 14, by "Q to Inlet", 9, and multiplying the result by the "Total AC", 7. i.e., $\frac{(14)}{(9)}$ (7) = AC Bypassing, 15.

16. AC Entering System - The "Total AC", 7, minus the "AC Bypassing Inlet", 15, will equal the AC Entering the System.

GUTTER FLOW ANALYSIS

Project _____ Designed by _____

Town _____ Route _____ Checked by _____

Sheet No.

Inlet Number	1																						
Time to Inlet	2																						
Area in Acres	3																						
Runoff Coefficient	4																						
AC	5																						
Sum of AC	6																						
Total AC	7																						
Rainfall Intensity	8																						
Q to Inlet	9																						
Grade of Gutter	10																						
Cross Slope of Shoulder	11																						
Depth of Flow at Gutter	12																						
Width of Flow	13																						
Q Bypassing Inlet	14																						
AC Bypassing Inlet	15																						
AC Entering Catch Basin	16																						

Source: Conn. DOT, Bureau of Highways, Drainage Manual

ROADWAY SURFACE DRAINAGE

DIRECTIONS FOR STORM SEWER SYSTEM DESIGN FORM

ENGINEERING DEPARTMENT

1. Line Segment - Identification of line usually between inlets, by numbers.

2. Time to Inlet - Time for surface flow to concentrate at the first inlet. If the area is such that it takes less than the minimum time of 5 minutes then 5 minutes shall be used until the accumulated time exceeds 5 minutes.

3. Time in Pipe - Time required to pass through line segment.

4. Accumulated Time - Time of concentration effective at location. the longest time is to be used. This can be overland flow to an inlet; accumulation of time in pipe; or a branch line entering a system.

5. AC Entering Catch Basin - AC determined by "Gutter Flow Analysis Form".

6. Sum of AC in System - Sum of the AC's entering inlets effective at location.

7. Rainfall Intensity - The intensity determined by the Accumulated Time 4.

8. "Q" in system - The product of sum of AC in system, 7, and the Rainfall Intensity, 5.

9. Pipe size - Self explanatory.

10. Length of Pipe - Self explanatory.

11. Slope - To be expressed to the nearest thousandth of a foot.

12. Average Velocity - That which will be obtained in pipe of size, type and slope specified at design discharge.

13. Full Capacity - Discharge which can be carried by pipe of size and type specified, flowing full.

14. Headwater - Height water will reach above the flowline that will develop at the design discharge in the structure.

15. "n" - Roughness coefficient: n=.012 for R.C.P. n=.019 for A.C.C.M.P. with paved invert.

STORM SEWER SYSTEM DESIGN

Project _____ Designed by _____

Town _____ Route _____ Checked by _____

Sheet No.

Line Segment	1																						
Time to Inlet	2																						
Time in Pipe	3																						
Accumulated Time	4																						
AC Entering Catch Basin	5																						
Sum of AC in System	6																						
Rainfall Intensity	7																						
Q in System	8																						
Pipe Size	9																						
Length of Pipe	10																						
Slope	11																						
Average Velocity	12																						
Full Capacity	13																						
Headwater	14																						
'n'	15																						

Source: Conn. DOT, Bureau of Highways, Drainage Manual

CHANNEL AND DITCH DRAINAGE

DIRECTIONS FOR OVERLAND FLOW ANALYSIS FORM

ENGINEERING DEPARTMENT

1. Ditch Location No. - Identify symbol for the point where the flow analysis is being done.

2. Station - Baseline Station at the point of analysis.

3. Offset - Dist. from Baseline (left or right).

4. Length of Travel - Dist. from the most remote point above the point of analysis.

5. Diff. Elev. - Diff. in elev. between the most remote point and the point of analysis.

6. Slope - The grade between the remote point and the point of analysis (expressed in ft./100 ft.).

7. Tc (KIRPICH) - Tc determined from the Kirpich Chart.

8. Tc (SEELYE) - Tc determined from the Seelye Chart.

9. Tc (RECOMMENDED) - Tc recommended for use in the calculation.

10. A - Area Contributing measured in acres.

11. C - Runoff coeff. of contributing area.

12. AC - Product of area and runoff coeff.

13. I - Rainfall intensity determined by Tc.

14. Q - The product of area, runoff coeff., and rainfall intensity.

Project: _____ Designed by: _____ Checked by: _____

Location: _____ Date: _____ Sheet No. _____ of _____

OVERLAND FLOW ANALYSIS FOR DITCH DESIGN

DITCH LOCATION NUMBER	STATION	OFFSET	LENGTH OF TRAVEL	DIFF. ELEV.	SLOPE	Tc (KIRPICH)	Tc (SEELY:E)	Tc (REC'MD)	A	C	AC	I	Q

CHANNEL AND DITCH DRAINAGE

DIRECTIONS FOR DITCH DESIGN FORM

ENGINEERING DEPARTMENT

1. Ditch Segment - ditch location numbers at the beginning and end of the section being designed.

2. Tc - Time of concentration determined by overland flow and time in the ditch.

3. AC Ent. - The AC entering the ditch in this section.

4. The sum of AC - The Total of the AC entering in this section and the AC already in the ditch.

5. I - Rainfall intensity determined by Tc.

6. Q - The product of the sum of AC and I.

7. Width - The bottom width of the ditch.

8. "N" - Manning's coeff. for the type of lining.

9. Slope - The grade of the ditch section expressed in ft./ft.

10. Veloc. - The velocity of the design flow.

11. Depth Flow - The depth of the design flow.

12. Depth Allow. - Allowable depth determined from cross sections.

13. Horiz. Radius - Approximate radius of curvature along the centerline of the ditch.

14. Diff. Surface Level - the difference in the surface level between the inside and outside edges.

15. Depth of Lining - Measured from the bottom of the ditch to the top elevation of the lining.

16. Type of Lining - Determined by design charts.

Project:_____ Designed by:_____ Checked by:_____

Location:_____ Date:_____ Sheet No._____ of _____

DITCH DESIGN

DITCH SEGMENT	Te	AC ENTER	Σ AC	I	Q	WIDTH	'a'	SLOPE	VELOC	DEPTH FLOW	DEPTH ALLOW	HORIZ. RADIUS	DIFF. SURFACE LEVEL	DEPTH OF LINING	TYPE OF LINING

'TOWN OF EAST HARTFORD
DESIGN MANNUAL

APPENDIX D

ZONING ILLUSTRATIONS

Table of Contents

Zoning Section,	Subject	
200,	Building Heights	D – 1
200,	Floor Area Ratio	D – 2
200,	Lot Lines	D – 3
200,	Lot Lines, Lot Frontage & Lot Width	D – 4
200,	Lot Depth	D – 5
200,	Yards	D – 6
200,	Lot Types	D – 7
200,	Lot Coverage & Lot Area	D – 8
203,	Buffer Strips	D – 9
224.6,	Signs, Various Styles	D – 10
* Plantings in Parking Lot		D – 11
703 Landscape Layout		D – 12

* Zoning Sections: 338.4, 41.1, 418.7, and 432.2

Project Checklist

(Click Here)

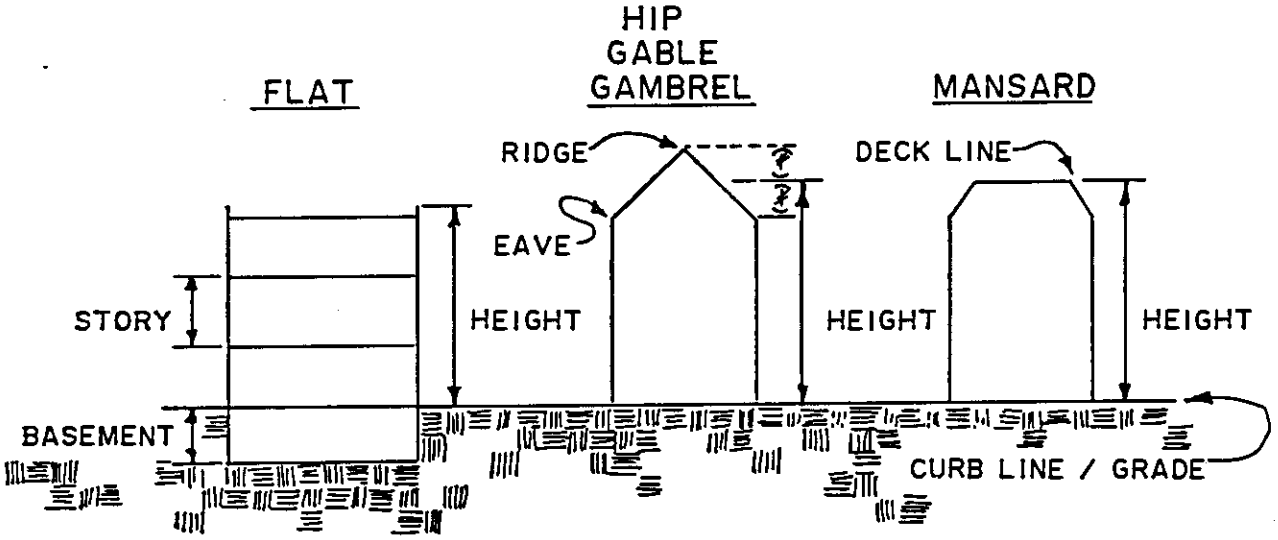

SOURCE: AMERICAN PLANNING ASSOCIATION

BUILDING HEIGHT

FLOOR AREA RATIO IS THE TOTAL FLOOR AREA ON A ZONING LOT, DIVIDED BY THE LOT AREA OF THAT ZONING LOT.

$$FAR = \frac{\text{TOTAL FLOOR AREA}}{\text{TOTAL LOT AREA}}$$

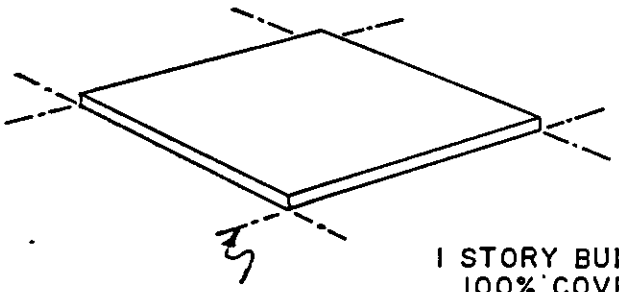

1 STORY BUILDING
100% COVER
FLOOR AREA RATIO = 1.0

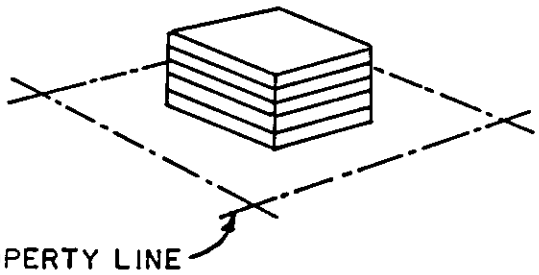

5 STORY BUILDING
20% COVER
FLOOR AREA RATIO = 1.0

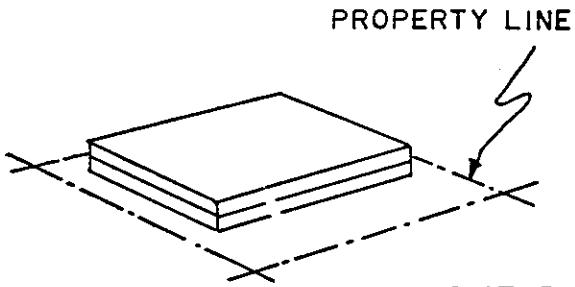

2 STORY BUILDING
50% COVER
FLOOR AREA RATIO = 1.0

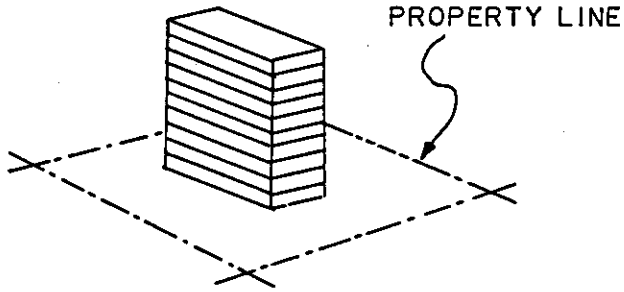

10 STORY BUILDING
10% COVER
FLOOR AREA RATIO = 1.0

SOURCE: PLANNING AND DESIGN CRITERIA

FRONT

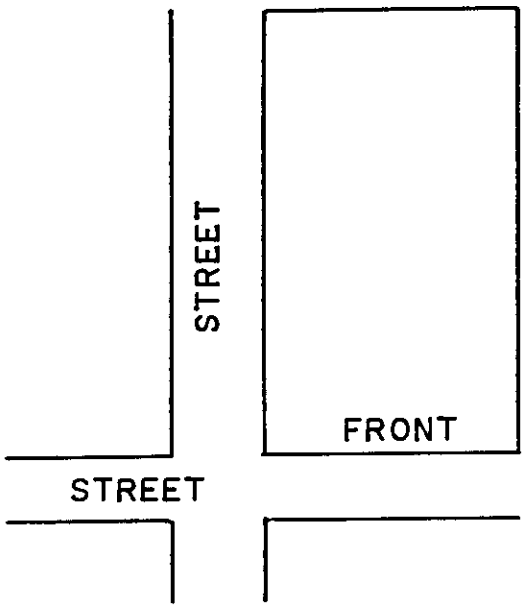

ON CORNER LOTS-
THE SIDE WITH THE
LEAST DIMENSION IS
CONSIDERED THE FRONT
YARD.

SIDE

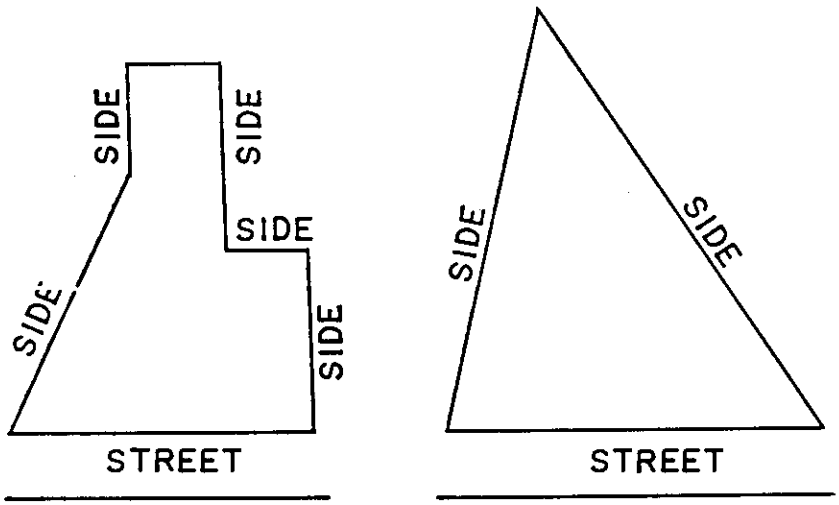

LOT LINES

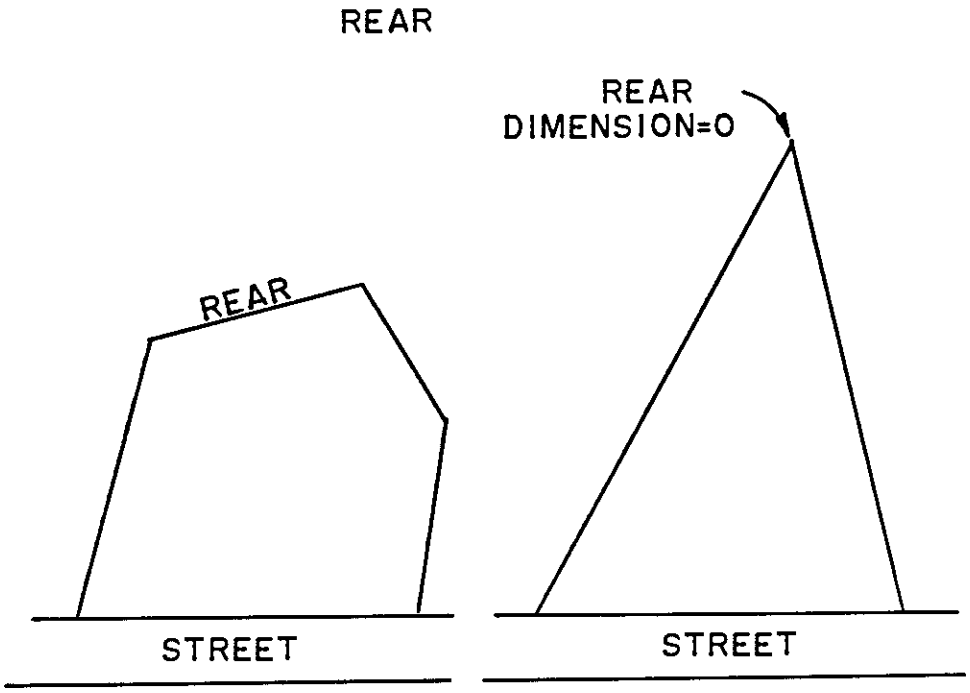

LOT LINES

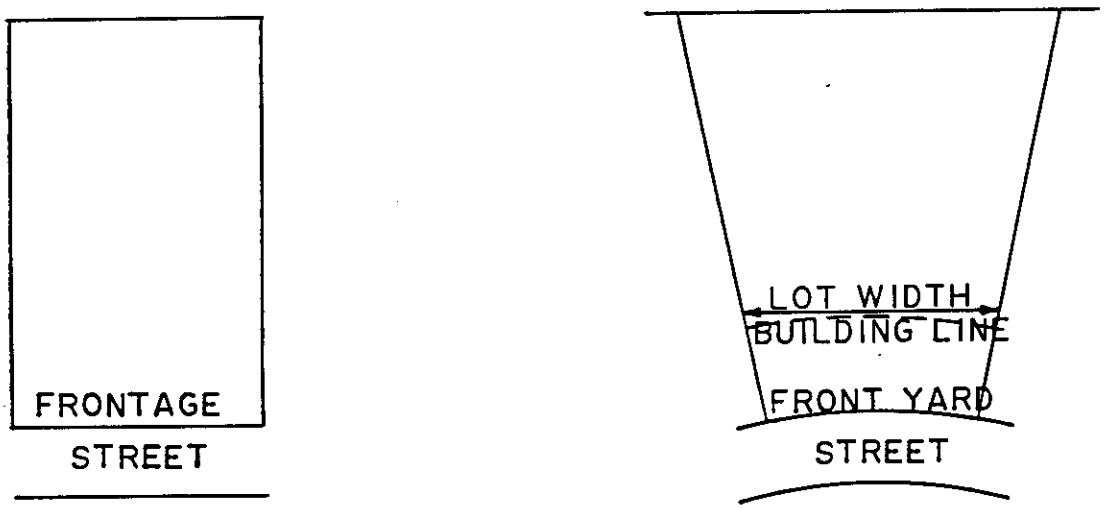

LOT FRONTAGE LOT WIDTH

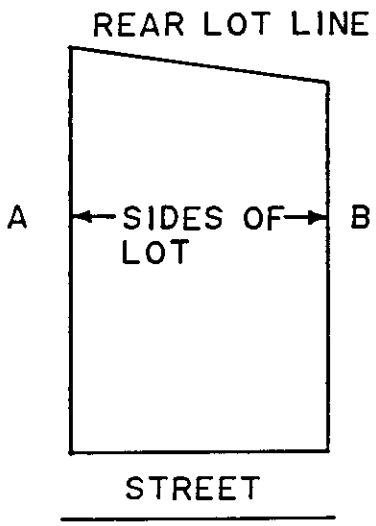

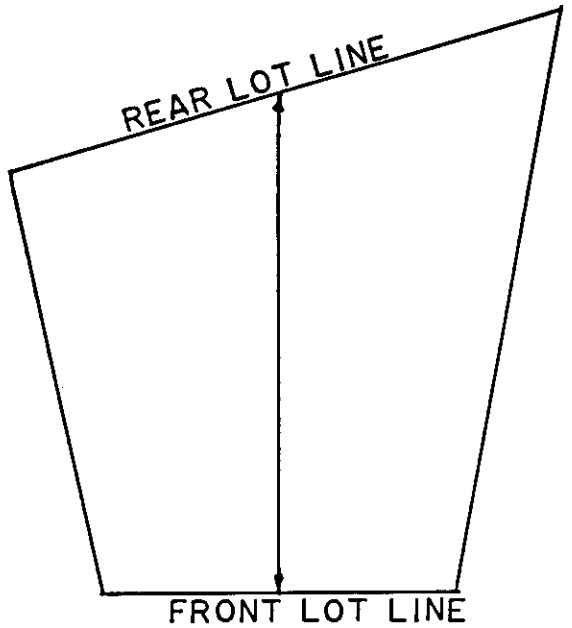

MEASURED FROM MIDDLE OF LOT FRONTAGE IN THE MEAN DIRECTION OF THE SIDE LOT LINES

LOT DEPTH

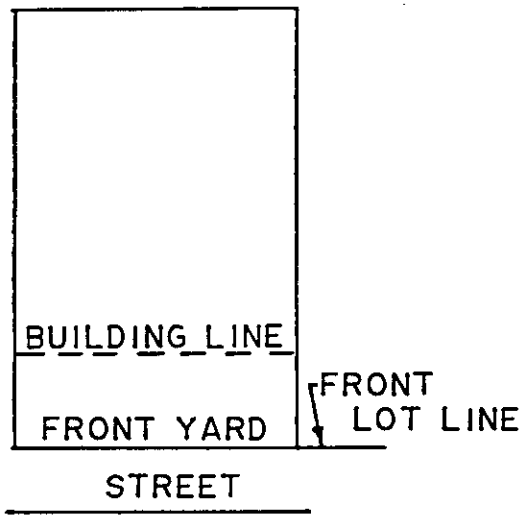

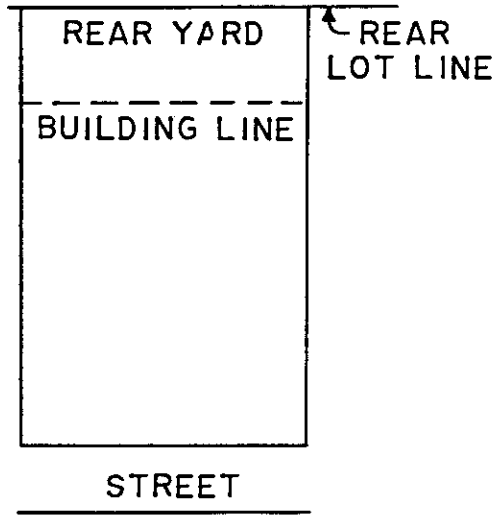

YARD FRONT YARD REAR

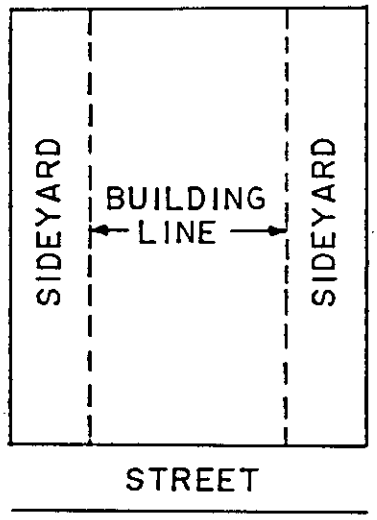

YARD SIDE

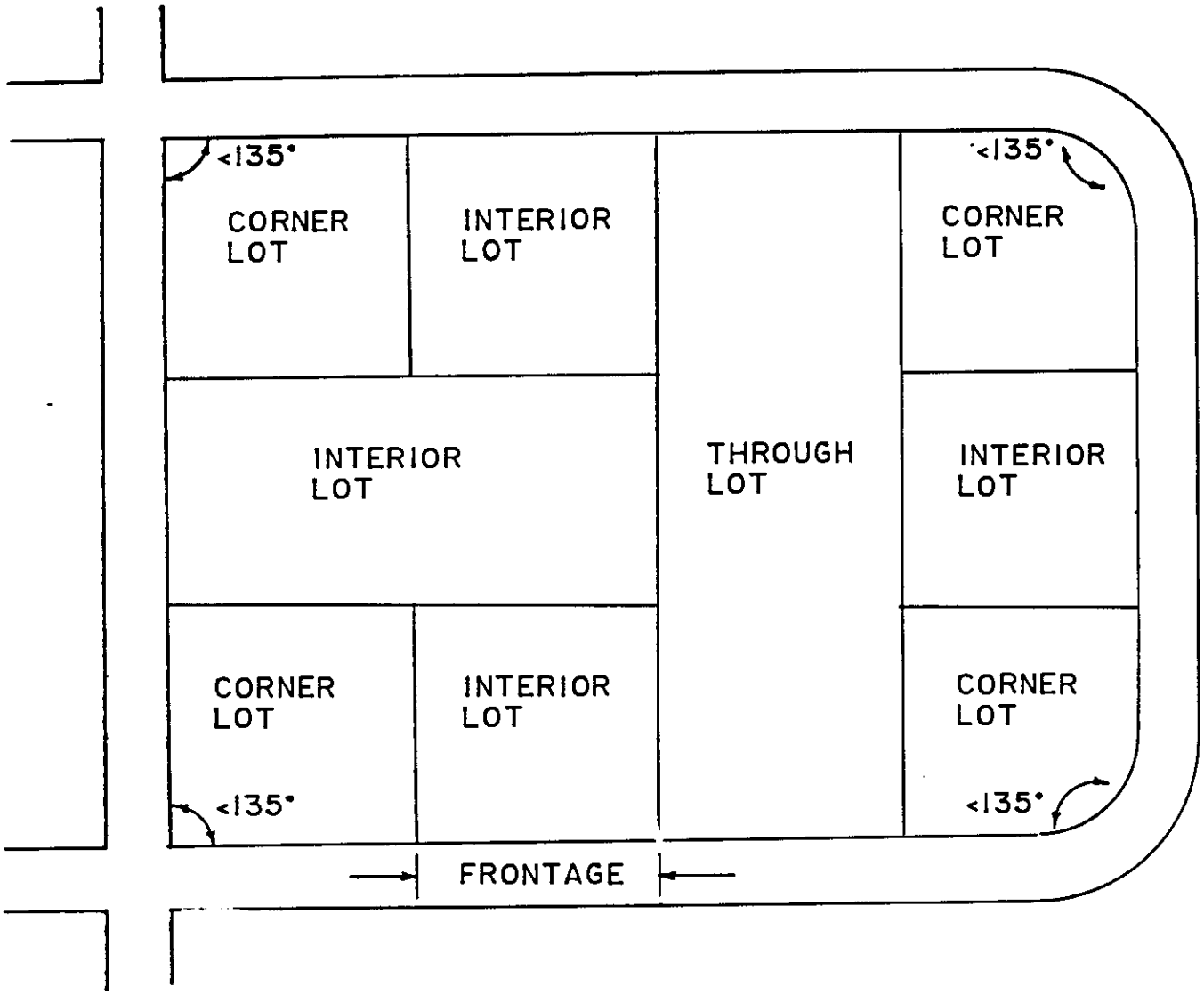
<135°
CORNER LOT
INTERIOR LOT
<135°
CORNER LOT
INTERIOR LOT
THROUGH LOT
INTERIOR LOT
CORNER LOT
INTERIOR LOT
CORNER LOT
<135°
<135°
FRONTAGE

TYPE OF LOTS

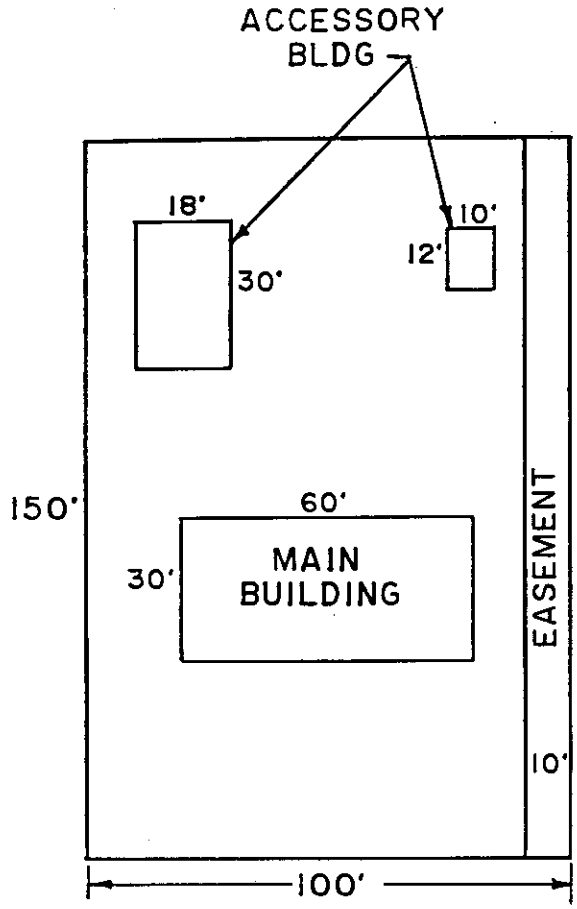

15,000$^{\phi}$ LOT AREA - INCLUDES EASEMENT

COVERAGE - 1800$^{\phi}$
540$^{\phi}$
120$^{\phi}$

TOTAL 2,460$^{\phi}$ / 16.4% LOT COVERAGE

LOT COVERAGE - LOT AREA

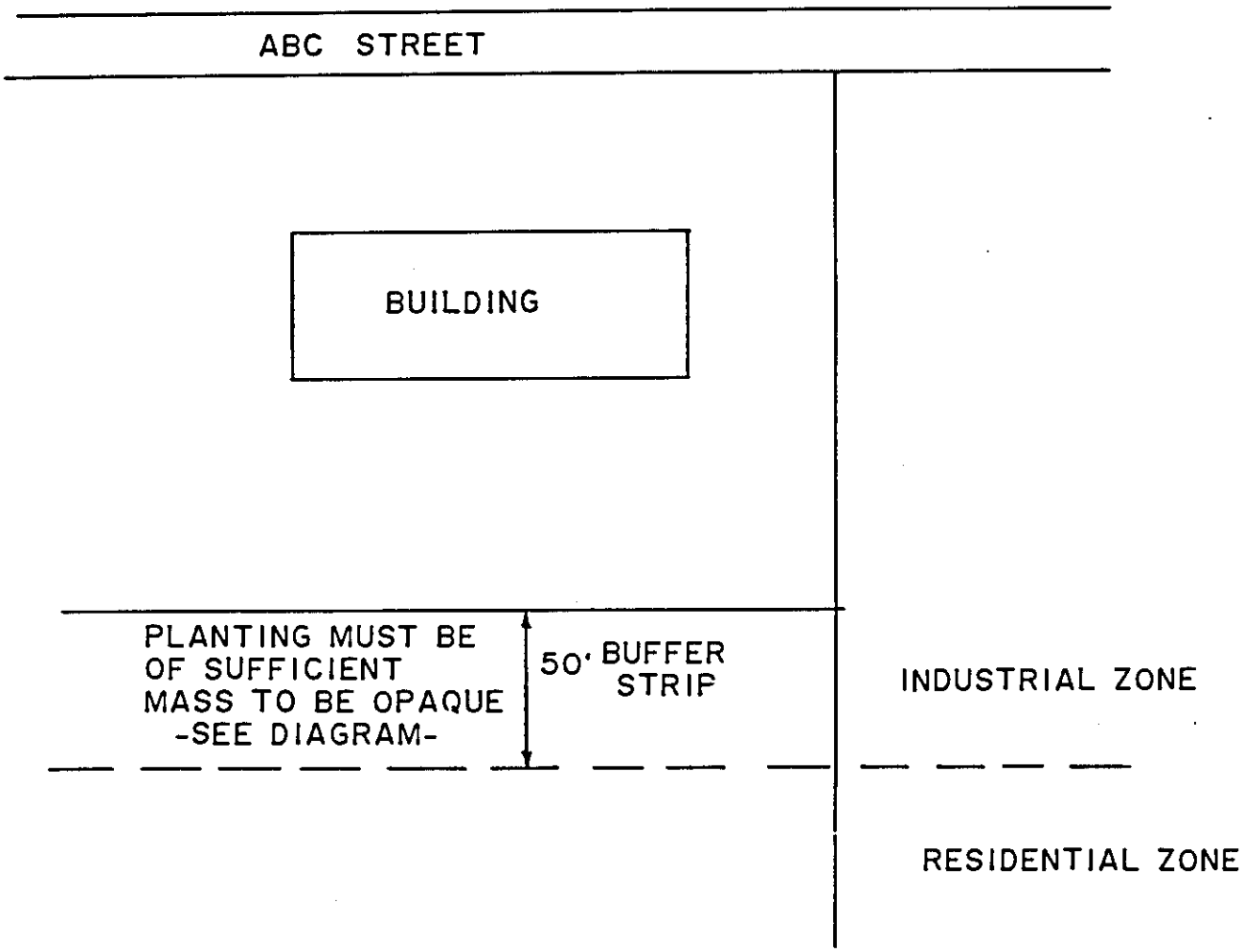

BUFFER STRIPS

TYPES OF SIGNS

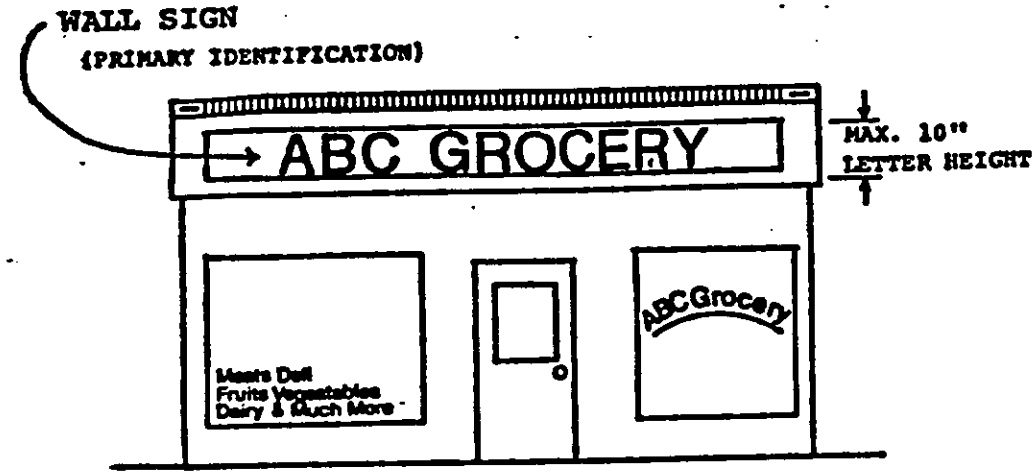

WINDOW SIGNS AND
DISPLAY AREA

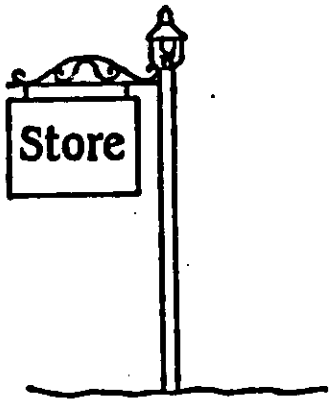

HANGING SIGN

SOME PROHIBITED SIGNS

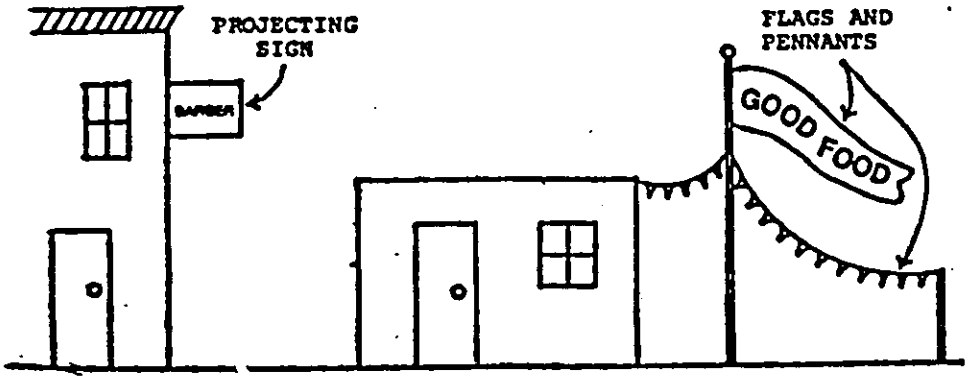

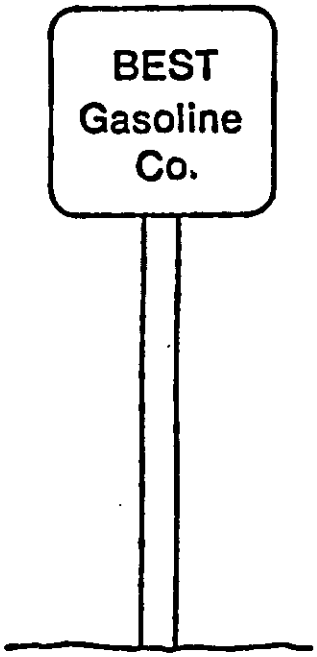

GROUND SIGN

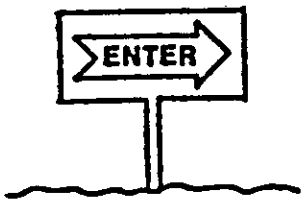

DIRECTIONAL SIGN

GROUND SIGN/
MONUMENT STYLE

10$^{\phi}$ LANDSCAPING REQUIRED PER PARKING SPACE WITH A MINIMUM OF ONE TREE PER LANDSCAPED ISLAND

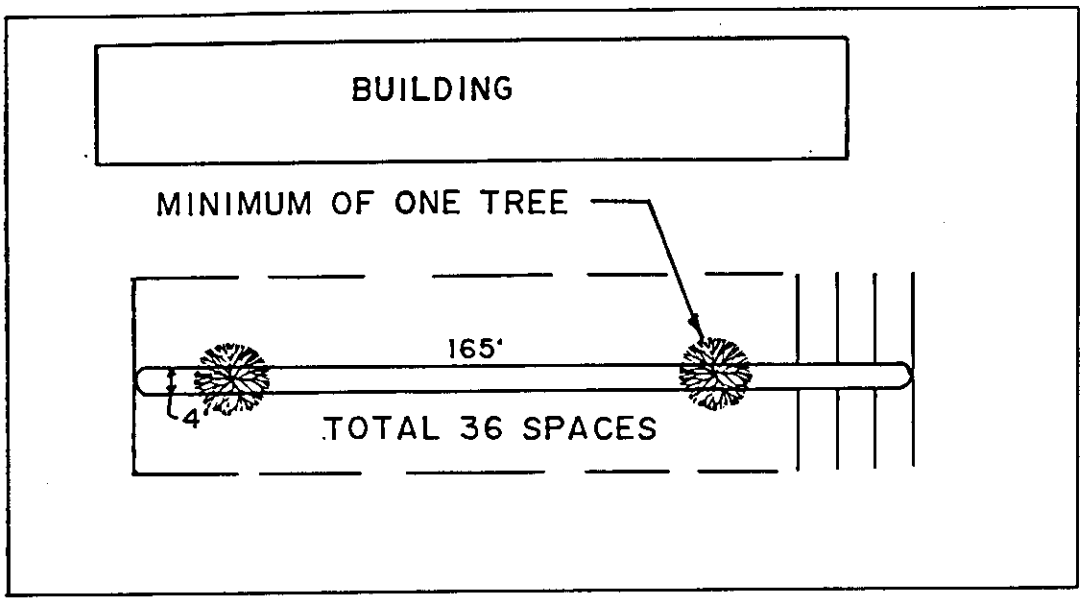

LANDSCAPED ISLAND

EACH 4' x 165' - TOTAL 600$^{\phi}$
MEETS / EXCEEDS REQUIREMENT

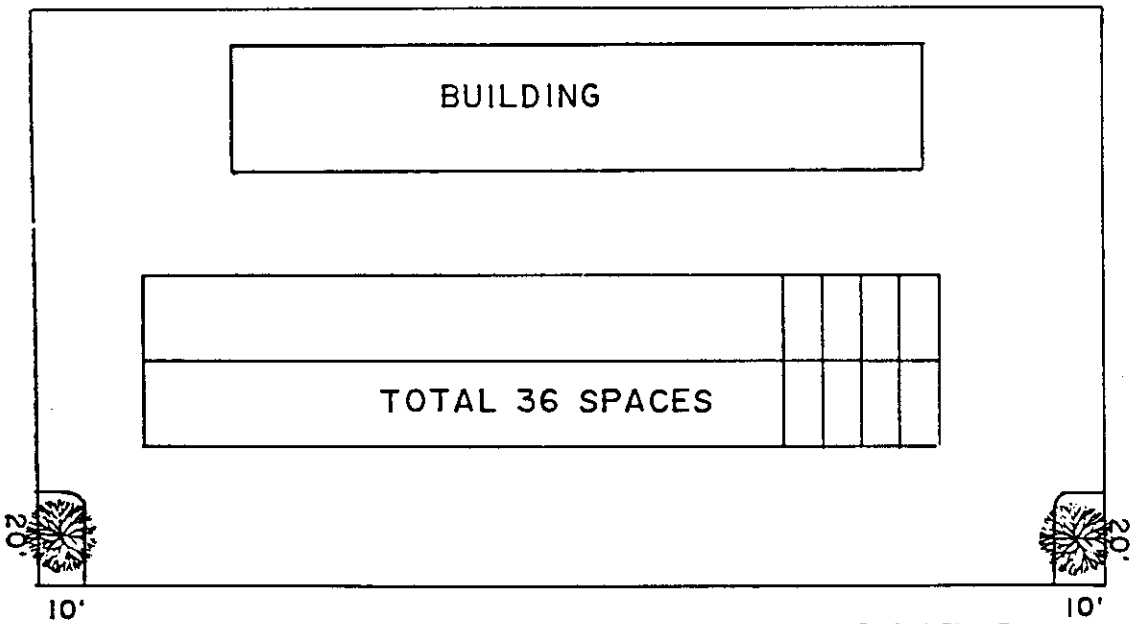

LANDSCAPED ISLANDS

EACH 10' x 20' - TOTAL 400$^{\phi}$
MEETS / EXCEEDS REQUIREMENT

EXAMPLES:

TYPE	SIZE	QUANTITY
ARBURVITAE	4' - 5' HEIGHT	5' ON CENTER IN TWO STAGGERED ROWS
HEMLOCK	4' - 5' HEIGHT	6' ON CENTER IN TWO STAGGERED ROWS
SPRUCE	5' - 6' HEIGHT	6' ON CENTER IN TWO STAGGERED ROWS
WHITE PINE	2" CALIPPER OR 6' HEIGHT	8' ON CENTER IN TWO STAGGERED ROWS

EXAMPLE:

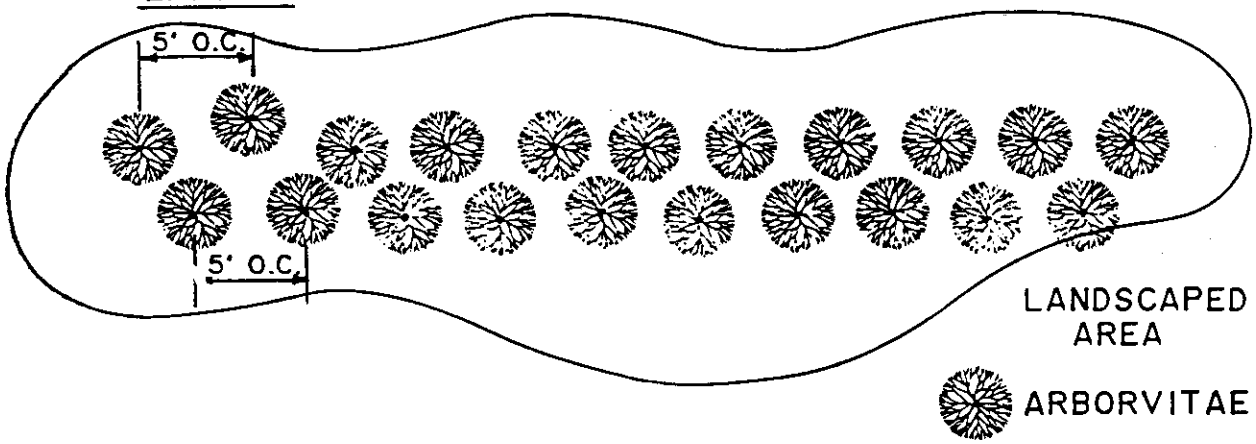

STANDARDS FOR LANDSCAPING -OF SUFFICIENT MASS TO BE OPAQUE

PROJECT CHECKLIST

	PROVIDED	NOT PROVIDED	N/A
TITLE			
DATE			
SCALE (graphic scales)			
NORTH ARROW			
NAME & ADDRESS OF DESIGN PROFESSIONAL			
P.E. & L.S. CERTIFICATION			
KEY MAP			
STREET NAMES			
LEGEND			
ABUTTING PROPERTY OWNERS			
LOT NUMBER (assessor lot)			
BOUNDARY LINES including dimensions & bearings (A-2 accuracy)			
MAP REFERENCE			
DIMENSIONAL TIES			
DATUMS			
BENCHMARK			
EXISTING GRADES			
PROPOSED GRADES			
EXISTING & PROPOSED STRUCTURES including finish floor elevation & dimensions			
LOCATION & DIMENSIONS OF RIGHT-OF-WAY, EASEMENTS, CHANNEL ENCROACHMENT LINE			
DRIVEWAYS, PARKING AREAS, SIDEWALKS, etc.			
PROFILES and/or CROSS SECTIONS			
STORM DRAINAGE SYSTEM			
EXISTING & PROPOSED UTILITIES			
ZONING DATA BLOCK			
LIGHTING PLAN			
LANDSCAPE PLAN			
INLAND WETLAND LIMIT & BUFFER			
FLOOD HAZARD LIMITS & ELEVATION			
TRAFFIC STUDY			
INTERNAL CIRCULATION & SIGNAGE			
LOADING DOCK LOCATIONS			
DUMPSTER PAD & ENCLOSURE			
EROSION CONTROL MEASURES			
CONSTRUCTION DETAILS			
WELL & SEPTIC SYSTEM LOCATION			
TOWN NOTE FOR INSPECTIONS			
APPROVAL LETTERS			
APPROVAL BLOCKS			
STATE & FEDERAL PERMITS provide documentation			

East Hartford Manual of Technical Design

Revision #2 - 05 October 2022

Insert the following into Section 5

The design of all detention basins and infiltration devices shall insure that the bottom of the storage device is a minimum of 2' (two feet) above the season high water table as determined by the required test pits. This allows for variations of the water table as well as insuring that the structure will drain within the time frames called for by the Connecticut Stormwater Quality Manual.

When designing for detention and/or retention, infiltration will <u>not</u> be counted in determining the required storage volumes.

The Connecticut Stormwater Quality Manual shall be used for storm drainage design unless superseded by this document.