# TOWN OF EAST HARTFORD
# PLANNING & ZONING COMMISSION
# APPLICATION FORM

DATE:_____

Official Receipt Date:
____/____/____

## 1. APPLICATION TYPE: (CHECK ALL THAT APPLY) *COMPLETE SECTION ON PAGE 2 OR 3

- [x] SITE PLAN APPLICATION
- [ ] SITE PLAN MODIFICATION
- [x] FLOOD HAZARD – MAJOR*
- [ ] FLOOD HAZARD – MINOR*
- [ ] NATURAL RESOURCES REMOVAL AND FILLING
- [ ] SPECIAL USE PERMIT*
- [ ] ZONING MAP CHANGE*
- [ ] TEXT AMENDMENT*
- [x] SOIL EROSION AND SEDIMENTATION - Cumulative disturbed area (sq. ft.): 41,000± SF

## 2. SITE AND PROJECT INFORMATION

PROPERTY ADDRESS: 31, 37, 46, 50, 58, 66, 70, & 114 S. Meadow Lane ZONE: R-3

ASSESSORS MAP AND LOT: 7-20&20A,-23,-25,-26,-28; 8-1,-2 PARCEL SIZE (ACRES OR SQ. FT.): 19.4± acres

PROJECT NAME: South Meadows Multi-Use Recreational Trail Phase I & II Paving

PROJECT DESCRIPTION (ATTACH ADDITIONAL SHEETS IF NEEDED):

Construction of recreational walking trail - includes 2,800± LF of a 10' wide bituminous concrete trail, informational and directional signage, and park benches to be installed on existing concrete pads. See attached general Narrative for additional information.

## 3. PROPERTY OWNER INFORMATION [ ] CHECK IF PRIMARY CONTACT

OWNER OF RECORD: See Attached - Goodwin College & Town of East Hartford

OWNER ADDRESS: _____

OWNER PHONE: _____ OWNER EMAIL: _____

OWNER SIGNATURE: Bryant L Harrell PRINT NAME: Bryant Harrell

The undersigned owner hereby authorizes: **(1)** this application, and **(2)** the Planning and Zoning Commission and Town of East Hartford staff the right to enter upon the property for the purposes of inspection associated with this application.

## 4. APPLICANT INFORMATION [ ] CHECK IF PRIMARY CONTACT

[x] CHECK IF APPLICANT IS SAME AS PROPERTY OWNER

APPLICANT: Goodwin College, Inc.

APPLICANT ADDRESS: One Riverside Drive, East Hartford, CT 06118

APPLICANT PHONE: 860-727-6756 APPLICANT EMAIL: BHarrell@Goodwin.edu

APPLICANT SIGNATURE: Bryant L Harrell PRINT NAME: Bryant Harrell

## 5. DESIGN PROFESSIONAL INFORMATION [x] CHECK IF PRIMARY CONTACT

FIRM: Zuvic, Carr and Associates, Inc. PHONE: 860-436-4901

CONTACT PERSON: Galen Semprebon, PE, LEED AP EMAIL: galen@zuvic.com

## - COMPLETE ONLY THE SECTIONS THAT APPLY TO YOUR APPLICATION TYPE -

**A. SPECIAL USE PERMIT** **(ATTACH ADDITIONAL SHEETS IF NEEDED)**

1) **Applicable Section of the Zoning Regulations:** _____

2) **Describe how the proposed Special Use Permit relates to the Plan of Conservation and Development:**

3) **Describe how the proposed Special Use Permit will benefit the Town of East Hartford:**

**B. FLOOD HAZARD ZONE – MAJOR DEVELOPMENT OR MINOR DEVELOPMENT**

1) **Name of associated watercourse:** Connecticut River

2) **Total amount of land (in sq. ft.) to be affected within the:**

   a. **Flood Hazard Zone:** 41,000± SF

   b. **Floodway:** 41,000± SF

   c. **Floodway fringe:** 0 SF

3) **Enumerate methods of compliance with Sections 601.10, 601.11, and 601.12 of the Zoning Regulations:**

Section 601.10 - (a) Proposed natural trail will generally match the existing natural grades and grading will be kept to a minimum to provide a level walking surface. There will be no adverse impacts to flood storage capacity or changes in site hydrology due to the project improvements. (b) Benches will be removed during the flood season. (c) The trail will be paved with bituminous concrete. (d) No utilities are proposed for this project.
Section 601.11 - Benches will be removed during flood season. Existing concrete pads have been constructed to match existing grades.
Section 601.12 - Proposed grades will generally match existing grades. There will be no adverse impacts to floodway functions and storm drainage due to project improvements.

## - COMPLETE ONLY THE SECTIONS THAT APPLY TO YOUR APPLICATION TYPE -

| C. | ZONING MAP CHANGE | (ATTACH ADDITIONAL SHEETS IF NEEDED) |
|---|---|---|

1) **Zoning information:**
   a. **Existing Zoning District:** _____
   b. **Proposed Zoning District:** _____
2) **Describe the existing and proposed use of land and buildings in zone change area:**
3) **Describe how the proposed Zone Change relates to the Plan of Conservation and Development:**
4) **Describe how the proposed Zone Change will benefit the Town of East Hartford:**

| D. | TEXT AMENDMENT | (ATTACH ADDITIONAL SHEETS IF NEEDED) |
|---|---|---|

1) **Section number and wording of existing Zoning Regulation proposed for amendment:**
2) **Proposed revision, addition, or change in wording to the Zoning Regulations:**
3) **Describe the circumstance that justifies the proposed amendment:**
4) **Describe how the proposed amendment clarifies or improves the Zoning Regulations and improves development in the Town of East Hartford:**
5) **Describe how the proposed amendment relates to the Plan of Conservation and Development:**

**EAST HARTFORD PLANNING AND ZONING COMMISSION**
**PUBLIC HEARING SIGN AFFIDAVIT**

FOR THE FOLLOWING APPLICATIONS:
SECTION 207 - SPECIAL USE PERMIT
SECTION 601 - FLOOD HAZARD ZONE
SECTION 602 - COMPREHENSIVE REHABILITATION ZONE
SECTION 603 - DESIGN DEVELOPMENT DISTRICT
SECTION 714 - ZONING MAP AMENDMENT

**Address/location of subject parcel (s):** 31, 37, 46, 50, 58, 66, 70, & 114 S. Meadow Lane

**Applicant:** Goodwin College, Inc.

**SIGN(S) RECEIVED BY:** Galen Semprebon _____ **Date**

I hereby swear that I/we have complied with the applicable Public Notice section of the East Hartford Zoning Regulations for the following application:

- [ ] SPECIAL USE PERMIT
- [x] MAJOR FLOOD HAZARD DEVELOPMENT
- [ ] ZONING MAP AMENDMENT

The applicant shall display a sign or signs which indicate that an application has been filed for the area on which the sign or signs have been posted. Said sign or signs shall be erected and maintained by the applicant wherever the parcel abuts each public or private street from the day that the notice of public hearing has been posted until the first secular day following the public hearing.

APPLICANT SIGNATURE

8/29/18
DATE

General Narrative
Planning & Zoning Application
South Meadows Multi-Use Recreational Trail Phase I & II Paving
East Hartford, CT

August 29, 2018

The purpose of this application is to permit the construction of a 2,800' long, 10' wide paved trail, across eight properties in East Hartford located along the east side of the Connecticut River. The East Hartford trail is one phase of a larger project, known as the South Meadows Multi-Use Recreational Trail project, which extends from East Hartford through Wethersfield and into Glastonbury ending at the Putnam Memorial Bridge. Benches will be installed on existing concrete pads, and informational and directional signage are proposed along the trail that will match the benches and signage approved for the previous sections.

The proposed East Hartford trail will be constructed over 8 properties on land totaling approximately 19.4 acres. The proposed yellow trail alignment will follow the top of the embankment along the river, while the proposed orange and blue trail alignments will follow the existing natural trail inland.

The total increase in impervious coverage will be approximately 28,000 S.F. (0.643 AC.) to accommodate the ADA compliant trail portion of the project. The increase in impervious coverage is minimal (3.3%) for the 19.4± acres of land involved, and any additional runoff that is not infiltrated into the adjacent vegetated areas would drain to the CT River. Due to the location of the site within the bottom of the CT River watershed, any increase in runoff to the CT River would not have any impact on the peak flows within the CT River. The walking trails will be constructed at existing grades and will not change any drainage patterns on the properties. The runoff from the impervious ADA trail will be directed onto the existing natural surfaces adjacent to the trail. The gravel under the ADA trail will also provide some storage for subsurface infiltration.

An endangered species review was conducted of the proposed route and no endangered plant species were found in the trail corridor. There are two areas of Federally Defined Wetlands in close proximity to the trail. The trail is designed to maintain a minimum separation distance from the Federally Defined Wetlands. The intent is that the trail be installed without removal of large trees (over 6" caliper) and that no clearing of vegetation beyond that required to provide the trail will be done. The Federal Wetlands will be protected by temporary fencing during construction.

The entire trail is located within the Flood Zone AE and within the Town Inland Wetlands. Construction will not occur during the normal flood season, and caution will be taken during construction to monitor flood conditions. A Construction Flood Contingency Plan is included in the Site Plans. Construction will also be timed to avoid work during the eagle breeding season. A complete description of the proposed erosion and sedimentation control measures and operation and maintenance schedule for the project is also included in the Site Plans.

## Signage - Walking Trail Directional markers

GOODWIN COLLEGE

SIGNAGE PROPOSAL
Goodwin College
Walking Trail
Directional markers

Note:

Directional Trail marker signs

-3" sq. Alum tube cut to 45 deg. angle at top
Cut tube to 72", 48" above ground. Welded
3/16" plate at top, 18-1/2" x 16-1/2". Paint
to match PMS 424C.

-1/4" Dibond panel, 15-1/2" x 17-1/2", full coverage
digital print with Luster Laminate applied.
parint. D/F
tape and silicone to alum. plate.

-Direct burial in concrete.


**Adams|Ahern**
Adams|Ahern Sign Solutions, Inc.
30 Arbor Street | Hartford, CT 06106


*Architectural Graphics, Wayfinding*
*Signage Design and Manufacturing*

Date: Rev. 1: December 9, 2016
Scale: 1-1/2" = 1' - 0"
Title: Design Development

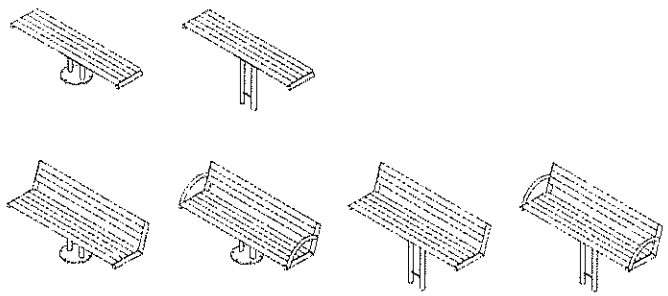

Bench options

Included components

- Assembled bench
- For surface mount option: (6) each 1/2-13 x 1-1/2" hex head cap screw, drop-in anchor for 1/2-13 screw and 1/2" flat washer. Setting tool for drop-in anchor included.

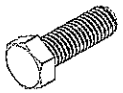

6x – hex head cap screw (surface mount only)

6x – flat washer (surface mount only)

6x – drop-in anchor (surface mount only)

1x – setting tool (surface mount only)

Tools Required

- Safety glasses
- Hammer drill with 5/8" dia masonry drill bit (for surface mount)
- Hammer (for surface mount)
- 3/4" wrench (for surface mount)

***ASSEMBLE WITH CARE!*** Pangard II® Polyester Powdercoat is a strong, long-lasting finish. To protect this finish during assembly, place unwrapped powdercoated parts on packaging foam or other non-marring surface. Do not place or slide powdercoated parts on concrete or other hard or textured surface – this will damage the finish causing rust to occur. Use touch-up paint on any gouges in the finish caused by assembly tools.

PROCEDURE FOR INSTALLATION:

1. Prepare proper footing or slab as required.

**Note:** Landscape Forms is not responsible for footing or slab installation.

FOR SURFACE MOUNTED BENCH:

**Note:** DO NOT DRAG bench across concrete or other rough surfaces. This could damage the powdercoat on the bottom of the base plate.

2. Place unit in desired position and mark anchor locations through holes provided in base plate.
3. Move unit and drill holes according to Fig. 1.
4. Clear the holes of dust and debris using compressed air.
5. Install drop-in anchors flush with surface of concrete.
6. Expand anchor with setting tool. Anchor is properly expanded when shoulder of setting tool is flush with top of anchor.
7. Place unit in desired position and install the washers and hex bolts. Tighten to 55-60 ft-lbs.
8. Periodically check fasteners and tighten if required.

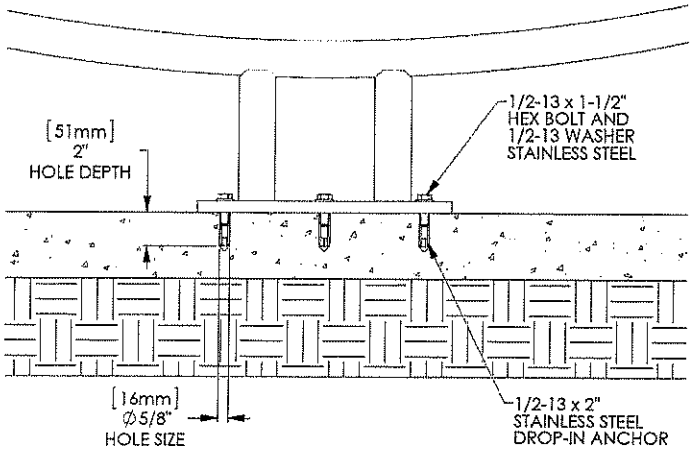


Fig. 1 – Anchor Detail

landscapeforms®

NOTE: CONCRETE SHOULD BE STEEL REINFORCED, CONCRETE: f'c = 3000 p.s.i.

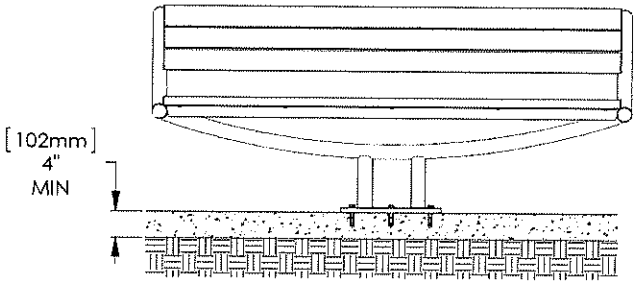


RECOMMENDED INSTALLATION DETAIL FOR MOUNTING ALONG SIDEWALK

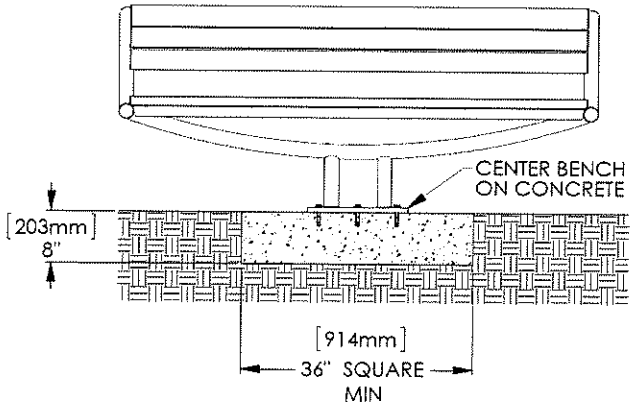


RECOMMENDED INSTALLATION DETAIL FOR MOUNTING TO NEW SLAB

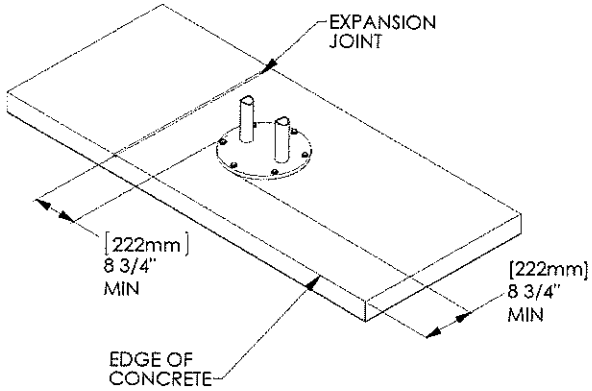


SPACING FOR SURFACE MOUNT BENCH

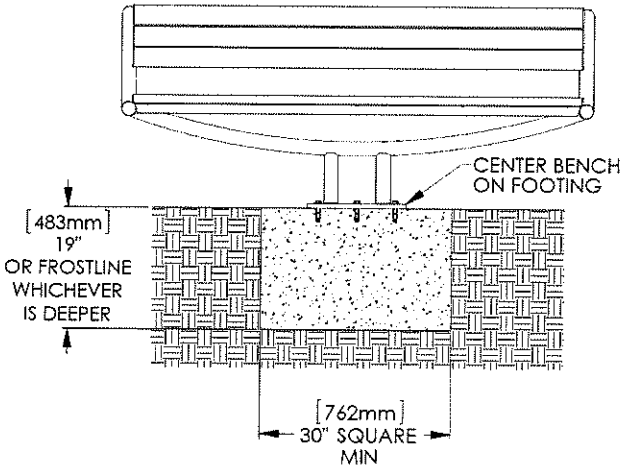


RECOMMENDED CAISSON FOOTING FOR SURFACE MOUNT BENCH

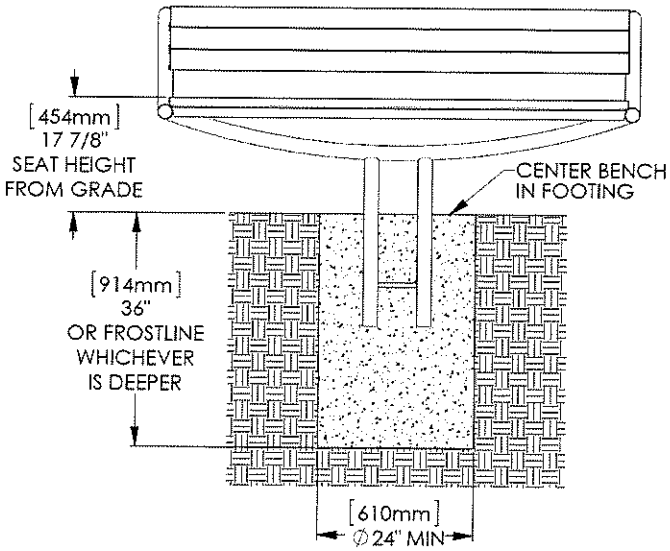


RECOMMENDED CAISSON FOOTING FOR EMBEDDED BENCH

landscapeforms®

P&Z Application for Permit
Property Owners
South Meadow Multi-Use Recreation Trail Phase I & II Paving
East Hartford, CT
August, 2018

Applicant and Owner: Goodwin College Inc.
Contact: Bryant Harrell, Vice President Phone: 860-727-6756 Email: BHarrell@Goodwin.edu

| Map-Lot | Property Address | Owner Name | Owner Address | Owner Town | Owner State | Owner Zip |
|---|---|---|---|---|---|---|
| 8-2 | 46 SOUTH MEADOW LN | GOODWIN COLLEGE INC | ONE RIVERSIDE DR | EAST HARTFORD | CT | 06118 |
| 7-26 | 58 SOUTH MEADOW LN | GOODWIN COLLEGE INC | ONE RIVERSIDE DR | EAST HARTFORD | CT | 06118 |
| 7-25 | 70 SOUTH MEADOW LN | GOODWIN COLLEGE INC | ONE RIVERSIDE DR | EAST HARTFORD | CT | 06118 |
| 7-28 | 37 SOUTH MEADOW LN | GOODWIN COLLEGE INC | ONE RIVERSIDE DR | EAST HARTFORD | CT | 06118 |

Owner: Town of East Hartford
Contact: Director of Public Works Phone: 860-291-7361

| Map-Lot | Property Address | Owner Name | Owner Address | Owner Town | Owner State | Owner Zip |
|---|---|---|---|---|---|---|
| 8-1 | 50 SOUTH MEADOW LN | TOWN OF EAST HARTFORD | 740 MAIN STREET | EAST HARTFORD | CT | 06108 |
| 7-23 | 66 SOUTH MEADOW LN | TOWN OF EAST HARTFORD | 740 MAIN STREET | EAST HARTFORD | CT | 06108 |
| 7-20A | 31 SOUTH MEADOW LN | TOWN OF EAST HARTFORD | 740 MAIN STREET | EAST HARTFORD | CT | 06108 |
| 7-20 | 114 SOUTH MEADOW LN | TOWN OF EAST HARTFORD | 740 MAIN STREET | EAST HARTFORD | CT | 06108 |

# GOODWIN COLLEGE
# ONE RIVERSIDE DRIVE, EAST HARTFORD, CT

## SOUTH MEADOWS MULTI-USE RECREATIONAL TRAIL

# EAST HARTFORD, CT

## PROJECT NUMBER
## 1912

## JULY, 2018

## REVISED AUGUST, 2018

# PHASE I & II PAVING

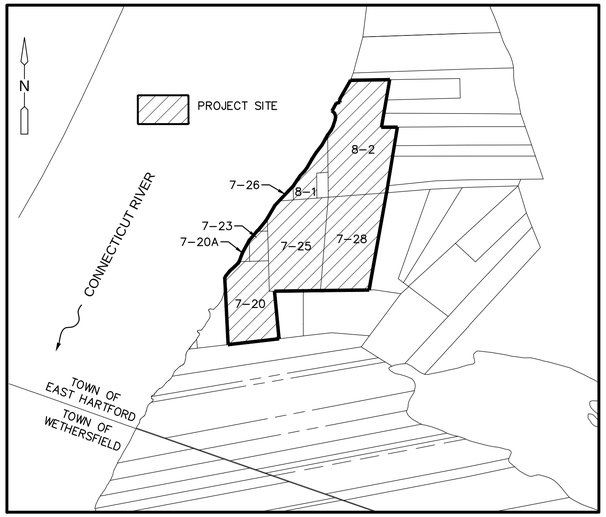


PROJECT SITE
SCALE: 1" = 500'

| PROJECT SITE - PROPERTY OWNERS | | | |
|---|---|---|---|
| MAP–LOT | PROPERTY ADDRESS | OWNER NAME | OWNER ADDRESS |
| 7–20 | 114 SOUTH MEADOW LANE | TOWN OF EAST HARTFORD | 740 MAIN STREET EAST HARTFORD, CT 06108 |
| 7–20A | 31 SOUTH MEADOW LANE | TOWN OF EAST HARTFORD | 740 MAIN STREET EAST HARTFORD, CT 06108 |
| 7–23 | 66 SOUTH MEADOW LANE | TOWN OF EAST HARTFORD | 740 MAIN STREET EAST HARTFORD, CT 06108 |
| 7–25 | 70 SOUTH MEADOW LANE | GOODWIN COLLEGE INC. | ONE RIVERSIDE DRIVE EAST HARTFORD, CT 06118 |
| 7–26 | 58 SOUTH MEADOW LANE | GOODWIN COLLEGE INC. | ONE RIVERSIDE DRIVE EAST HARTFORD, CT 06118 |
| 7–28 | 37 SOUTH MEADOW LANE | GOODWIN COLLEGE INC. | ONE RIVERSIDE DRIVE EAST HARTFORD, CT 06118 |
| 8–1 | 50 SOUTH MEADOW LANE | TOWN OF EAST HARTFORD | 740 MAIN STREET EAST HARTFORD, CT 06108 |
| 8–2 | 46 SOUTH MEADOW LANE | GOODWIN COLLEGE INC. | ONE RIVERSIDE DRIVE EAST HARTFORD, CT 06118 |

PREPARED FOR

GOODWIN COLLEGE

PREPARED BY


ZUVIC • CARR AND ASSOCIATES
CONSULTING ENGINEERS
40 Cold Spring Road • Rocky Hill, CT 06067
Phone 860.436.4901 • Fax 860.436.4953


## INSPECTION NOTES

1. THE DEVELOPER SHALL NOTIFY THE TOWN OF EAST HARTFORD ENGINEERING DIVISION 24 HOURS PRIOR TO BEGINNING ANY STORM DRAINAGE, ROADWAY PREPARATION, PAVING, SIDEWALK, CURBING, STREET LINE MONUMENTATION, PROPERTY CORNER PINS, ETC., TO SCHEDULE INSPECTIONS. THE DIVISION CAN BE REACHED BETWEEN 8:30 A.M. – 4:30 P.M. AT 291–7380.
2. THE TOWN SHALL BE NOTIFIED IN WRITING AT LEAST 2 DAYS IN ADVANCE OF THE PRE–CONSTRUCTION MEETING BETWEEN THE CONTRACTOR AND THE ENGINEER.

TOWN OF EAST HARTFORD
PLANNING & ZONING COMMISSION
SITE PLAN CERTIFICATE
OF APPROVAL

APPROVAL DATE _____
EXPIRATION DATE _____

_____ CHAIRMAN

## LIST OF DRAWINGS


| | |
|---|---|
| -- | COVER SHEET |
| CE-1 | SITE PLAN |
| CE-1A | SITE PLAN |
| CE-2 | PROFILE |
| CE-3 | SITE DETAILS |


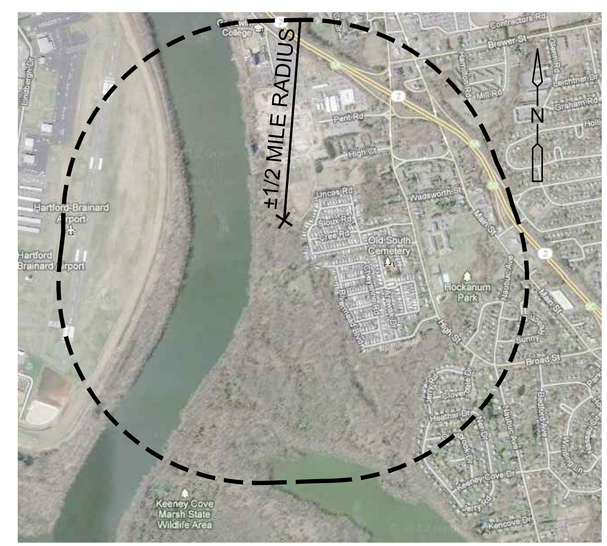


LOCATION PLAN
SCALE: 1" = 1000'

# INSPECTION NOTES

1. THE DEVELOPER SHALL NOTIFY THE TOWN OF EAST HARTFORD ENGINEERING DIVISION 24 HOURS PRIOR TO BEGINNING ANY STORM DRAINAGE, ROADWAY PREPARATION, PAVING, SIDEWALK, CURBING, STREET LINE MONUMENTATION, PROPERTY CORNER PINS, ETC., TO SCHEDULE INSPECTIONS. THE DIVISION CAN BE REACHED BETWEEN 8:30 A.M. – 4:30 P.M. AT 291–7380.
2. THE TOWN SHALL BE NOTIFIED IN WRITING AT LEAST 2 DAYS IN ADVANCE OF THE PRE–CONSTRUCTION MEETING BETWEEN THE CONTRACTOR AND THE ENGINEER.

## LEGEND

- INLAND WETLANDS
- CENTERLINE OF TRAIL
- CONSTRUCTION FENCE
- EROSION CONTROL
- CONTROL POINT
- SIGN
- CONSTRUCTION ENTRANCE PAD
- EXISTING CONCRETE BENCH PAD

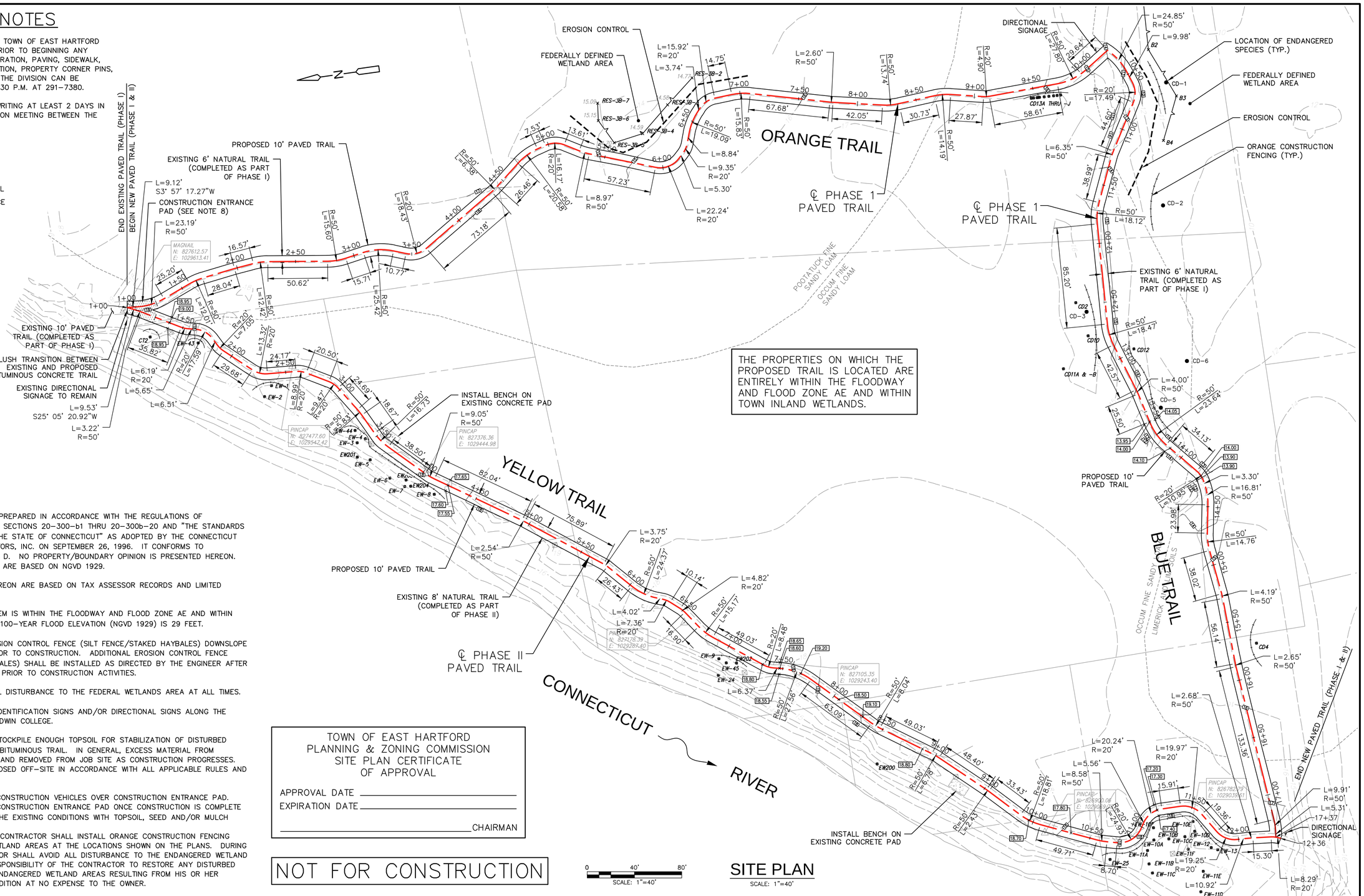


## NOTES:

1. THIS SURVEY AND MAP WERE PREPARED IN ACCORDANCE WITH THE REGULATIONS OF CONNECTICUT STATE AGENCIES SECTIONS 20–300–b1 THRU 20–300b–20 AND "THE STANDARDS FOR SURVEYS AND MAPS IN THE STATE OF CONNECTICUT" AS ADOPTED BY THE CONNECTICUT ASSOCIATION OF LAND SURVEYORS, INC. ON SEPTEMBER 26, 1996. IT CONFORMS TO HORIZONTAL ACCURACY CLASS D. NO PROPERTY/BOUNDARY OPINION IS PRESENTED HEREON. ELEVATIONS DEPICTED HEREON ARE BASED ON NGVD 1929.
2. PROPERTY LINES DEPICTED HEREON ARE BASED ON TAX ASSESSOR RECORDS AND LIMITED RECORD RESEARCH.
3. ENTIRE PROPOSED TRAIL SYSTEM IS WITHIN THE FLOODWAY AND FLOOD ZONE AE AND WITHIN TOWN INLAND WETLANDS. THE 100–YEAR FLOOD ELEVATION (NGVD 1929) IS 29 FEET.
4. CONTRACTOR TO INSTALL EROSION CONTROL FENCE (SILT FENCE/STAKED HAYBALES) DOWNSLOPE OF ALL DISTURBED AREAS PRIOR TO CONSTRUCTION. ADDITIONAL EROSION CONTROL FENCE (SILT FENCE OR STAKED HAYBALES) SHALL BE INSTALLED AS DIRECTED BY THE ENGINEER AFTER STAKEOUT OF THE TRAIL, BUT PRIOR TO CONSTRUCTION ACTIVITIES.
5. CONTRACTOR SHALL AVOID ALL DISTURBANCE TO THE FEDERAL WETLANDS AREA AT ALL TIMES.
6. CONTRACTOR SHALL INSTALL IDENTIFICATION SIGNS AND/OR DIRECTIONAL SIGNS ALONG THE TRAIL AS DETERMINED BY GOODWIN COLLEGE.
7. CONTRACTOR TO STRIP AND STOCKPILE ENOUGH TOPSOIL FOR STABILIZATION OF DISTURBED AREAS ADJACENT TO THE 10' BITUMINOUS TRAIL. IN GENERAL, EXCESS MATERIAL FROM PROJECT TO BE LIVE–LOADED AND REMOVED FROM JOB SITE AS CONSTRUCTION PROGRESSES. EXCESS MATERIAL TO BE DISPOSED OFF–SITE IN ACCORDANCE WITH ALL APPLICABLE RULES AND REGULATIONS.
8. CONTRACTOR TO DIRECT ALL CONSTRUCTION VEHICLES OVER CONSTRUCTION ENTRANCE PAD. CONTRACTOR SHALL REMOVE CONSTRUCTION ENTRANCE PAD ONCE CONSTRUCTION IS COMPLETE AND RESTORE THE AREA TO THE EXISTING CONDITIONS WITH TOPSOIL, SEED AND/OR MULCH
9. PRIOR TO CONSTRUCTION THE CONTRACTOR SHALL INSTALL ORANGE CONSTRUCTION FENCING AROUND THE ENDANGERED WETLAND AREAS AT THE LOCATIONS SHOWN ON THE PLANS. DURING CONSTRUCTION THE CONTRACTOR SHALL AVOID ALL DISTURBANCE TO THE ENDANGERED WETLAND AREAS. IT SHALL BE THE RESPONSIBILITY OF THE CONTRACTOR TO RESTORE ANY DISTURBED OR DAMAGED AREAS IN THE ENDANGERED WETLAND AREAS RESULTING FROM HIS OR HER ACTIONS TO ITS ORIGINAL CONDITION AT NO EXPENSE TO THE OWNER.

TOWN OF EAST HARTFORD
PLANNING & ZONING COMMISSION
SITE PLAN CERTIFICATE
OF APPROVAL

APPROVAL DATE _____

EXPIRATION DATE _____

_____ CHAIRMAN

NOT FOR CONSTRUCTION

0 40' 80'
SCALE: 1"=40'

## SITE PLAN

SCALE: 1"=40'

| REV. NO. | DATE | DRWN | CHKD | REMARKS |
|---|---|---|---|---|
| 1 | 08/2018 | SJH | GBS | PER TOWN COMMENTS |

PROJECT NO.: 1912
DESIGNED BY: SJH/GBS
DRAWN BY: SJH
SHEET CHK'D BY: GBS
CROSS CHK'D BY:
APPROVED BY: GBS
DATE: 7–13–18

PREPARED FOR:
GOODWIN COLLEGE
ONE RIVERSIDE DRIVE
EAST HARTFORD, CT

PREPARED BY:
ZUVIC·CARR AND ASSOCIATES
CONSULTING ENGINEERS
40 Cold Spring Road • Rocky Hill, CT 06067
Phone 860.436.4901 • Fax 860.436.4953

SOUTH MEADOWS MULTI-USE RECREATIONAL TRAIL

EAST HARTFORD, CT

PHASE I & II PAVING SITE PLAN

SHEET NO. CE-1

FILE PATH: H:\Projects\Goodwin College\1912 - South Meadows Trail\AutoCAD\C\1912 - Site Plan & Profile - Ph1&2 Paving.dwg PLOT DATE: 8/28/2018 PLOT TIME: 4:24:15 PM

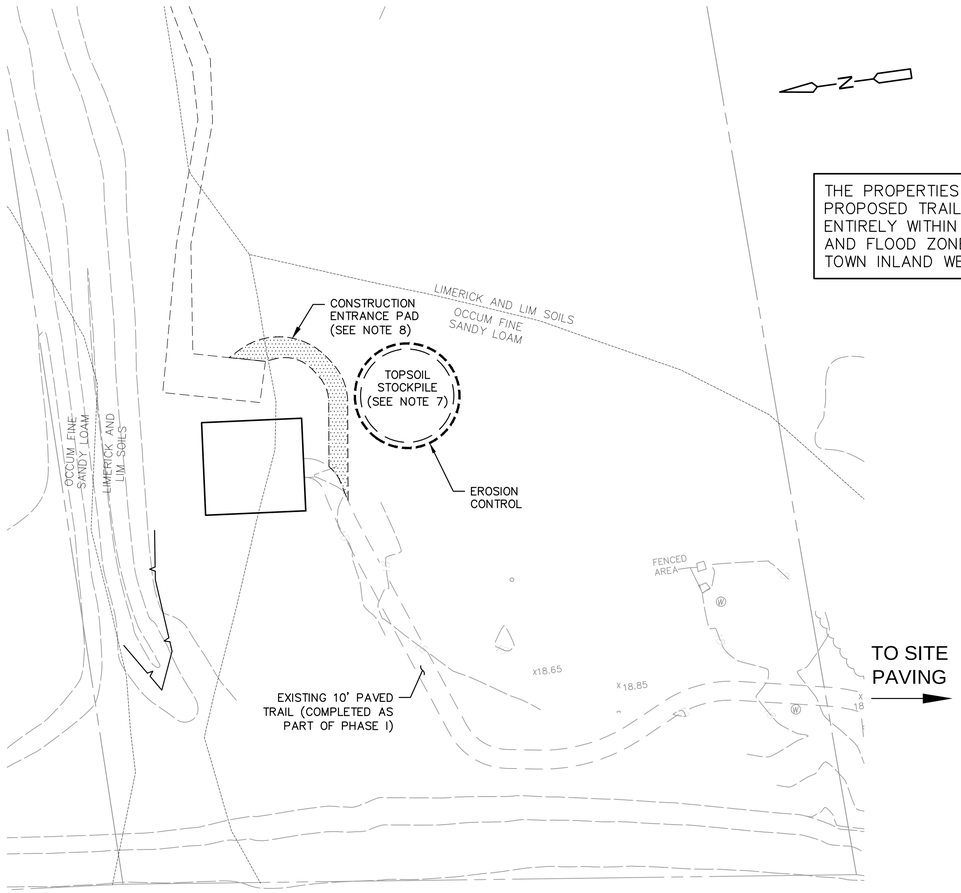


## SITE PLAN

SCALE: 1"=40'

## NOTES:

1. THIS SURVEY AND MAP WERE PREPARED IN ACCORDANCE WITH THE REGULATIONS OF CONNECTICUT STATE AGENCIES SECTIONS 20–300–b1 THRU 20–300b–20 AND "THE STANDARDS FOR SURVEYS AND MAPS IN THE STATE OF CONNECTICUT" AS ADOPTED BY THE CONNECTICUT ASSOCIATION OF LAND SURVEYORS, INC. ON SEPTEMBER 26, 1996. IT CONFORMS TO HORIZONTAL ACCURACY CLASS D. NO PROPERTY/BOUNDARY OPINION IS PRESENTED HEREON. ELEVATIONS DEPICTED HEREON ARE BASED ON NGVD 1929.
2. PROPERTY LINES DEPICTED HEREON ARE BASED ON TAX ASSESSOR RECORDS AND LIMITED RECORD RESEARCH.
3. ENTIRE PROPOSED TRAIL SYSTEM IS WITHIN THE FLOODWAY AND FLOOD ZONE AE AND WITHIN TOWN INLAND WETLANDS. THE 100–YEAR FLOOD ELEVATION (NGVD 1929) IS 29 FEET.
4. CONTRACTOR TO INSTALL EROSION CONTROL FENCE (SILT FENCE/STAKED HAYBALES) DOWNSLOPE OF ALL DISTURBED AREAS PRIOR TO CONSTRUCTION. ADDITIONAL EROSION CONTROL FENCE (SILT FENCE OR STAKED HAYBALES) SHALL BE INSTALLED AS DIRECTED BY THE ENGINEER AFTER STAKEOUT OF THE TRAIL, BUT PRIOR TO CONSTRUCTION ACTIVITIES.
5. CONTRACTOR SHALL AVOID ALL DISTURBANCE TO THE FEDERAL WETLANDS AREA AT ALL TIMES.
6. CONTRACTOR TO STRIP AND STOCKPILE ENOUGH TOPSOIL FOR STABILIZATION OF DISTURBED AREAS ADJACENT TO THE 10' BITUMINOUS TRAIL. IN GENERAL, EXCESS MATERIAL FROM PROJECT TO BE LIVE–LOADED AND REMOVED FROM JOB SITE AS CONSTRUCTION PROGRESSES. EXCESS MATERIAL TO BE DISPOSED OFF–SITE IN ACCORDANCE WITH ALL APPLICABLE RULES AND REGULATIONS.
7. CONTRACTOR TO DIRECT ALL CONSTRUCTION VEHICLES OVER CONSTRUCTION ENTRANCE PAD. CONTRACTOR SHALL REMOVE CONSTRUCTION ENTRANCE PAD ONCE CONSTRUCTION IS COMPLETE AND RESTORE THE AREA TO THE EXISTING CONDITIONS WITH TOPSOIL, SEED AND/OR MULCH

TOWN OF EAST HARTFORD
PLANNING & ZONING COMMISSION
SITE PLAN CERTIFICATE
OF APPROVAL

APPROVAL DATE _____

EXPIRATION DATE _____

_____ CHAIRMAN

## INSPECTION NOTES

1. THE DEVELOPER SHALL NOTIFY THE TOWN OF EAST HARTFORD ENGINEERING DIVISION 24 HOURS PRIOR TO BEGINNING ANY STORM DRAINAGE, ROADWAY PREPARATION, PAVING, SIDEWALK, CURBING, STREET LINE MONUMENTATION, PROPERTY CORNER PINS, ETC., TO SCHEDULE INSPECTIONS. THE DIVISION CAN BE REACHED BETWEEN 8:30 A.M. – 4:30 P.M. AT 291–7380.
2. THE TOWN SHALL BE NOTIFIED IN WRITING AT LEAST 2 DAYS IN ADVANCE OF THE PRE–CONSTRUCTION MEETING BETWEEN THE CONTRACTOR AND THE ENGINEER.

## LEGEND

- INLAND WETLANDS
- EROSION CONTROL
- CONSTRUCTION ENTRANCE PAD

0 40' 80'
SCALE: 1"=40'

NOT FOR CONSTRUCTION

| REV. NO. | DATE | DRWN | CHKD | REMARKS |
|---|---|---|---|---|
| 1 | 08/2018 | SJH | GBS | PER TOWN COMMENTS |

PROJECT NO.: 1912
DESIGNED BY: SJH/GBS
DRAWN BY: SJH
SHEET CHK'D BY: GBS
CROSS CHK'D BY:
APPROVED BY: GBS
DATE: 7–13–18

PREPARED FOR:
GOODWIN COLLEGE
ONE RIVERSIDE DRIVE
EAST HARTFORD, CT

PREPARED BY:
ZUVIC·CARR AND ASSOCIATES
CONSULTING ENGINEERS
40 Cold Spring Road • Rocky Hill, CT 06067
Phone 860.436.4901 • Fax 860.436.4953

SOUTH MEADOWS MULTI-USE RECREATIONAL TRAIL

EAST HARTFORD, CT

PHASE I & II PAVING
SITE PLAN

SHEET NO.
CE-1A

FILE PATH: H:\Projects\Goodwin College\1912 - South Meadows Trail\AutoCAD\C\1912 - Site Plan & Profile - Ph1&2 Paving.dwg PLOT DATE: 8/28/2018 PLOT TIME: 4:26:40 PM

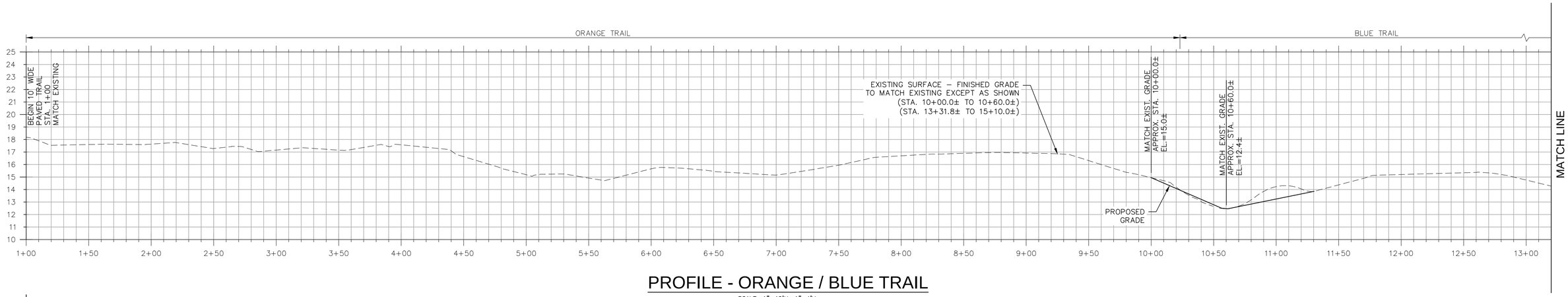


## PROFILE - ORANGE / BLUE TRAIL

SCALE: 1"=40'H; 1"=4'V

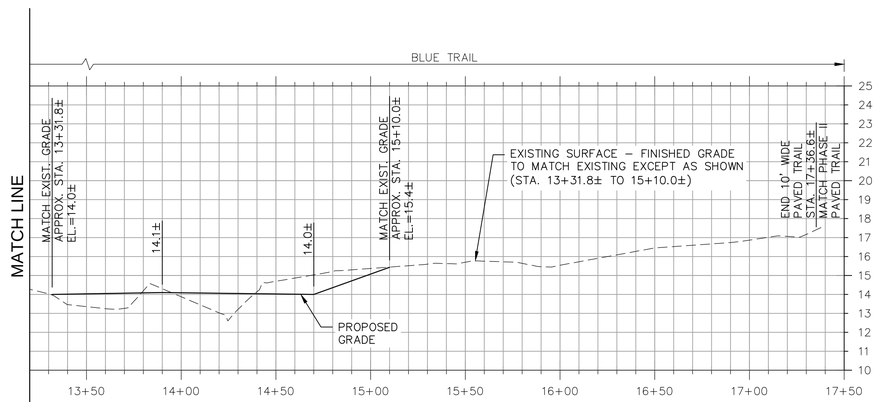


## PROFILE - BLUE TRAIL (CONT.)

SCALE: 1"=40'H; 1"=4'V

TOWN OF EAST HARTFORD
PLANNING & ZONING COMMISSION
SITE PLAN CERTIFICATE
OF APPROVAL

APPROVAL DATE _____

EXPIRATION DATE _____

_____ CHAIRMAN

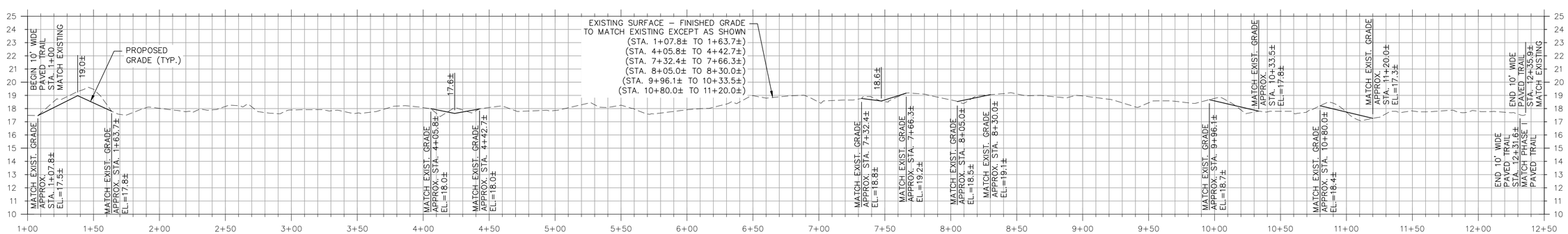


## PROFILE - YELLOW TRAIL

SCALE: 1"=40'H; 1"=4'V

0 40' 80'
HORIZONTAL SCALE: 1"=40'

0 4' 8'
VERTICAL SCALE: 1"=4'

NOT FOR CONSTRUCTION

| REV. NO. | DATE | DRWN | CHKD | REMARKS |
|---|---|---|---|---|
| 1 | 08/2018 | SJH | GBS | PER TOWN COMMENTS |

PROJECT NO.: 1912
DESIGNED BY: SJH/GBS
DRAWN BY: SJH
SHEET CHK'D BY: GBS
CROSS CHK'D BY:
APPROVED BY: GBS
DATE: 7-13-18

PREPARED FOR:
GOODWIN COLLEGE
ONE RIVERSIDE DRIVE
EAST HARTFORD, CT

PREPARED BY:
ZUVIC·CARR AND ASSOCIATES
CONSULTING ENGINEERS
40 Cold Spring Road • Rocky Hill, CT 06067
Phone 860.436.4901 • Fax 860.436.4953

SOUTH MEADOWS MULTI-USE RECREATIONAL TRAIL

EAST HARTFORD, CT

PHASE I & II PAVING PROFILES

SHEET NO.
CE-2

FILE PATH: H:\Projects\Goodwin College\1912 - South Meadows Trail\AutoCAD\C1912 - Site Plan & Profile - Ph1&2 Paving.dwg PLOT DATE: 8/28/2018 PLOT TIME: 3:20:03 PM

## NARRATIVE

THE PROJECT ENTAILS THE CONSTRUCTION OF APPROXIMATELY 2,970 L.F. OF A 10' WIDE BITUMINOUS WALKING TRAIL. THE PROPOSED WALKING TRAIL WILL CROSS 8 PROPERTIES TOTALING APPROXIMATELY 22.5 ACRES.

ALL CONSTRUCTION IS WITHIN THE FLOOD PLAIN OF THE CONNECTICUT RIVER. AS SUCH, THE TRAILS WILL BE CONSTRUCTED TO MATCH EXISTING GRADE WITH NO ADDITIONAL FILL ADDED. CONSTRUCTION WILL OCCUR OUTSIDE THE NORMAL FLOOD SEASON, AND CAUTION WILL BE TAKEN DURING CONSTRUCTION TO MONITOR FOR POSSIBLE FLOOD CONDITIONS. THE CONSTRUCTION WILL ALSO BE TIMED TO AVOID THE EAGLE BREEDING SEASON.

INFORMATIONAL SIGNAGE WILL BE INSTALLED AS PART OF THE CONSTRUCTION ALONG WITH OTHER AMENITIES (BENCHES, DIRECTIONAL SIGNAGE, ETC.).

### CONSTRUCTION SCHEDULE

CONSTRUCTION IS SCHEDULED TO BE STARTED IN OCTOBER 2018 AND BE COMPLETED IN NOVEMBER 2018.

### RESPONSIBLE CONTACT

THE RESPONSIBLE CONTACT PERSON FOR ASSURING THAT ALL SOIL EROSION AND SEDIMENTATION CONTROL MEASURES ARE PROPERLY INSTALLED AND MAINTAINED WILL BE MR. DAN LARSON AT GOODWIN COLLEGE (TELEPHONE NO. (860) 528–4111). MR. DAN LARSON WILL ALSO BE RESPONSIBLE FOR MAINTAINING THE PERMANENT MEASURES WHEN THE PROJECT IS COMPLETED.

## CONSTRUCTION NOTES: 10' BITUMINOUS TRAIL

1. CONTRACTOR TO STAKE OUT TRAIL BASED ON GEOMETRY SHOWN ON PLANS. ENGINEER TO ADJUST LOCATION IN FIELD AS REQUIRED TO AVOID REMOVAL OF ANY TREES OVER 6" IN DIAMETER, AND TO AVOID SENSITIVE AREAS (FEDERAL WETLANDS AREAS AND SEDGE STUDY AREA).
2. CONTRACTOR TO AVOID REMOVING ANY TREES OVER 6" IN DIAMETER.
3. TRIM BRANCHES AS DIRECTED BY THE ENGINEER TO PROVIDE ACCESS FOR CONSTRUCTION AND TO MAINTAIN AN OPEN TRAIL NETWORK. TRIMMING SHALL BE DONE UNDER THE SUPERVISION OF AN ARBORIST OR OTHER QUALIFIED PROFESSIONAL.
4. CONTRACTOR SHALL ONLY REMOVE STUMPS WITHIN THE LIMITS OF THE BITUMINOUS TRAIL NO STUMPS SHALL BE REMOVED OUTSIDE OF THE LIMITS OF THE BITUMINOUS TRAIL.
5. THE MAXIMUM TRAIL GRADE SHALL BE 5%.
6. THE TRAIL SHALL HAVE A CROSS SLOPE OF BETWEEN 1% AND 2%.
7. IN LOCATIONS WHERE GRADING TO MATCH EXISTING GRADE IS REQUIRED, THE MAXIMUM SIDE SLOPE SHALL BE 3:1.
8. THE TRAIL SHALL MATCH THE EXISTING GRADES AND LAND CONTOURS TO THE GREATEST EXTENT PRACTICAL.
9. CONTRACTOR SHALL MINIMIZE DISTURBANCE DURING CONSTRUCTION, AND AVOID ANY INTRUSION OR DISTURBANCE TO THE FEDERALLY DEFINED WETLANDS OR ENDANGERED SPECIES AREAS.
10. TRAIL TO FOLLOW NATURAL TOPOGRAPHY. MINOR GRADING TO PROVIDE THE REQUIRED GRADE AND CROSS SLOPE.
11. TREES AND BRUSH TO BE CHIPPED ON SITE. WOOD CHIPS TO BE USED TO STABILIZE DISTURBED AREAS WHERE REQUIRED.
12. DISTURBED AREAS ADJACENT TO THE WALKWAY SHALL BE STABILIZED WITH LOAM AND SEED.
13. NO CONSTRUCTION SHALL TAKE PLACE DURING FROZEN CONDITIONS OR DURING FLOODING CONDITIONS.
14. ALL WORK SHALL BE DONE IN ACCORDANCE WITH CT DOT FORM 817 AND THE TOWN OF EAST HARTFORD PUBLIC WORKS STANDARDS.

## CONSTRUCTION SEQUENCE: 10' BITUMINOUS TRAIL

1. TRAIL TO BE MARKED OUT IN FIELD BY CONTRACTOR PRIOR TO CONSTRUCTION.
2. EROSION CONTROL TO BE INSTALLED WHERE REQUIRED BY ENGINEER (SILT FENCE DOWN–SLOPE).
3. CLEAR GROUND VEGETATION, CUT TREES (LESS THAN 6" DIAMETER) WHERE MARKED BY ENGINEER. TREES TO BE CUT SHALL BE CUT FLUSH AT GROUND LEVEL. STUMPS AND ROOTS OUTSIDE TRAIL EXTENTS SHALL BE LEFT IN PLACE.
4. STRIP TOPSOIL AND SUBSOIL TO A WIDTH OF 11' AND A DEPTH OF 11".
5. CONSTRUCT 10' WIDE BITUMINOUS TRAIL (SEE DETAIL).
6. LOAM AND SEED ALL DISTURBED AREAS.
7. WOOD CHIPS TO BE UTILIZED TO STABILIZE ANY LOCALIZED AREAS AS REQUIRED BY ENGINEER.
8. INSTALL SIGNAGE AND OTHER AMENITIES.
9. REMOVE ALL EROSION CONTROL MEASURES ONCE DISTURBED AREAS ARE STABILIZED..

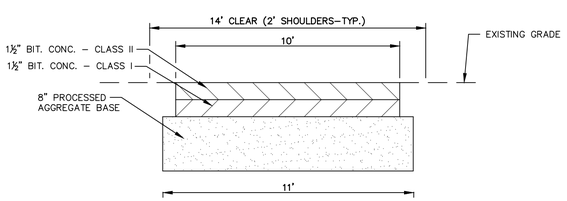


TYPICAL TRAIL SECTION 10' BITUMINOUS
NOT TO SCALE

## CONSTRUCTION FLOOD CONTINGENCY PLAN:

THIS SITE IS CLOSE TO THE CONNECTICUT RIVER. ACCORDING TO THE FEDERAL EMERGENCY PROTECTION AGENCY (FEMA) FLOOD INSURANCE RATE MAPS (FIRM) EFFECTIVE DATE SEPTEMBER 26, 2008, SOME WORK AREAS ARE WITHIN THE 100–YR FLOOD BOUNDARY.

THE FLOOD CONTINGENCY PLAN ACTIONS OUTLINED BELOW SHALL BE IMPLEMENTED DURING CONSTRUCTION IN THE EVENT OF A "SIGNIFICANT RAINFALL EVENT," DEFINED HEREIN AS A STORM DURING WHICH MORE THAN 2.5–INCHES OF RAINFALL OCCURS IN A ONE–HOUR PERIOD OR MORE THAN 6.5–INCHES OCCURS IN A 24–HOUR PERIOD (STORM WITH A POTENTIAL RETURN PERIOD OF 50–YEARS) OR IF THE CONNECTICUT RIVER RISES ABOVE ELEVATION 9.0 (NGVD 1929) AS A RESULT OF LESSER STORMS. CONTRACTOR SHALL:

1. ADMINISTER ALL FLOOD CONTINGENCY ACTIONS AT THE SITE AND ABIDE BY THIS FLOOD CONTINGENCY PLAN.
2. EXCHANGE EMERGENCY CONTACT TELEPHONE NUMBERS WITH OWNER AT THE BEGINNING OF THE WORK, IN CASE CONTACT IS NEEDED AFTER NORMAL BUSINESS HOURS.
3. MONITOR WEATHER CONDITIONS FROM START TO COMPLETION OF WORK INCLUDING FORECASTS FOR A "SIGNIFICANT RAINFALL EVENT" AND RISING RIVER LEVELS.
4. NOTIFY OWNER OF ANY ADVANCE FORECAST FOR A "SIGNIFICANT RAINFALL EVENT" OR FLOODING.
5. HALT ALL CONSTRUCTION ACTIVITIES WITHIN THE 100 YEAR FLOOD BOUNDARY AT ONSET OF A "SIGNIFICANT STORM EVENT" AND DURING ANY SUBSEQUENT PERIODS OF RISING RIVER LEVELS THAT FLOOD THE SITE.
6. STAGE ALL CONSTRUCTION MATERIALS AND EQUIPMENT FOR LONG TERM STORAGE (LONGER THAN 1 WEEK) OUT OF THE FLOODPLAIN. ANY FUEL OR MAINTENANCE FLUID CONTAINERS SHALL BE STORED OFF–SITE. SHORT TERM STORAGE OF MATERIALS (LESS THAN 1 WEEK) MAY OCCUR WITHIN FLOODPLAIN, BUT MUST BE REMOVED PRIOR TO ANY FLOODING EVENT.
7. INSPECT ALL WORK AREAS TO ENSURE CONSTRUCTION AREAS ARE STABILIZED AND PROTECTED FROM RISING WATER LEVELS TO THE GREATEST EXTENT POSSIBLE.
8. NOTIFY OWNER OF ANY FLOODING PROBLEMS AND INSPECT THE WORK AREA FOR DAMAGE WITH OWNER AS SOON AS PRACTICABLE AFTER ANY "SIGNIFICANT RAINFALL EVENT."

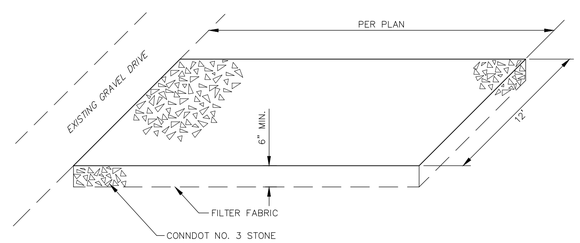


NOTE:

1. MAINTAIN ANTI–TRACKING PAVEMENT IN GOOD CONDITION THROUGH OUT CONSTRUCTION PERIOD.

CONSTRUCTION ENTRANCE PAD
NOT TO SCALE

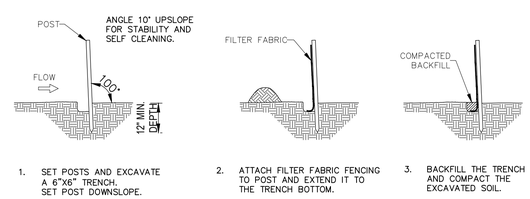


PLACEMENT AND CONSTRUCTION OF SYNTHETIC FILTER BARRIER "SILT FENCE"
NOT TO SCALE

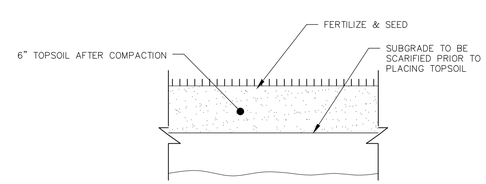


TURF ESTABLISHMENT DETAIL
NOT TO SCALE

## EROSION AND SEDIMENT CONTROL:

1. EROSION AND SEDIMENT CONTROL MEASURES SHALL BE INSTALLED AS REQUIRED TO CONTROL EROSION FROM THE CONSTRUCTION ACTIVITIES. SILT FENCE SHALL BE INSTALLED DOWN–SLOPE OF ALL AREAS TO BE DISTURBED BY CONSTRUCTION ACTIVITIES. ADDITIONAL MEASURES SHALL BE INSTALLED AS REQUIRED BY THE ENGINEER, OWNER, OR THE TOWN.
2. ALL EROSION AND SEDIMENT CONTROL MEASURES SHALL BE CONSTRUCTED IN ACCORDANCE WITH STANDARDS AND SPECIFICATIONS OF THE "2002 GUIDELINES FOR SOIL EROSION AND SEDIMENT CONTROL" DATED MAY, 2002 BY THE CONNECTICUT COUNCIL ON SOIL AND WATER CONSERVATION. ALL EROSION CONTROL MEASURES ARE TO BE MAINTAINED AND UPGRADED AS REQUIRED TO ACHIEVE PROPER SEDIMENT CONTROL DURING CONSTRUCTION.
3. SEDIMENT REMOVED FROM CONTROL STRUCTURES SHALL BE DISPOSED OF OFFSITE AND ABOVE THE FLOODPLAIN IN A MANNER WHICH IS CONSISTENT WITH THE INTENT OF THIS PLAN. ALL HAYBALES OR SILT FENCE RETAINING SEDIMENT OVER ½ THEIR HEIGHT SHALL HAVE THE SEDIMENT REMOVED AND ALL DAMAGED EROSION CONTROLS REMOVED AND REPLACED.
4. CONTRACTOR SHALL BE ASSIGNED THE RESPONSIBILITY FOR IMPLEMENTING THIS EROSION AND SEDIMENT CONTROL PLAN. THIS RESPONSIBILITY INCLUDES THE INSTALLATION AND MAINTENANCE OF CONTROL MEASURES, AND INFORMING ALL PARTIES ENGAGED ON THE CONSTRUCTION SITE OF THE REQUIREMENTS AND OBJECTIVES OF THE PLAN.
5. ONLY THE SMALLEST PRACTICAL AREA OF DISTURBED LAND SHALL BE EXPOSED DURING CONSTRUCTION, AND SUCH EXPOSURE SHALL BE KEPT TO THE SHORTEST PRACTICAL PERIOD OF TIME.
6. WHENEVER AND WHEREVER PRACTICAL, NEW MATERIALS TO BE INSTALLED WITHIN THE FLOOD HAZARD AREA SHALL BE UNLOADED AND INSTALLED IMMEDIATELY UPON DELIVERY. UTILIZE EXISTING DRIVEWAYS AND ROADWAYS FOR VEHICLE TURNING AND STAGING.
7. SURROUND ANY TEMPORARY MATERIAL STOCKPILE AND STAGING AREA(S) WITH HAYBALES AND/OR SILT FENCE, AS REQUIRED.
8. THE CONTRACTOR SHALL BE RESPONSIBLE FOR CONTROLLING DUST AND WIND EROSION THROUGHOUT THE LIFE OF THE CONTRACT. DUST CONTROL SHALL INCLUDE APPLICATION OF WATER ON EXPOSED SOILS.
9. HAYBALES SHALL BE USED ONLY AS A TEMPORARY MEASURE. WHERE CONTROL MEASURES WILL BE REQUIRED FOR LONGER THAN SIXTY (60) DAYS, SILT FENCE SHALL BE USED.
10. NO WORK SHALL OCCUR DURING PERIODS OF LOCALIZED FLOODING OR HEAVY RAINFALL.
11. ESTABLISH TURF ON DISTURBED AREAS OUTSIDE THE TRAIL LIMITS. APPLY SEED AS FOLLOWS:

| | |
|---|---|
| CREEPING RED FESCUE | 35% |
| RED TOP (STREEKER, COMMON) | 5% |
| PERENNIAL RYE GRASS | 35% |
| CREEPING BENTGRASS | 25% |
| | 100% BY WEIGHT |

APPLY SEED AT A RATE OF 2 LBS./1,000 S.F. PLANTING SEASONS SHALL BE APRIL 1 TO JUNE 1 AND AUGUST 15 TO OCTOBER 1. AFTER OCTOBER 1 SUCH DISTURBED AREAS SHALL BE STABLIZED WITH MULCH UNTIL THE NEXT PLANTING SEASON.

### INSTALLATION OF SEDIMENTATION AND EROSION CONTROL MEASURES

SILT FENCE

A. DIG A SIX INCH TRENCH ON THE UPHILL SIDE OF THE DESIGNATED FENCELINE LOCATION.

B. POSITION THE POST AT THE BACK OF THE TRENCH (DOWNHILL SIDE), AND HAMMER THE POST AT LEAST 1.5 FEET INTO THE GROUND.

C. LAY THE BOTTOM SIX INCHES OF THE FABRIC INTO THE TRENCH TO PREVENT UNDERMINING BY STORM WATER RUN–OFF.

D. BACKFILL THE TRENCH AND COMPACT.

HAYBALES

A. BALES SHALL BE PLACED IN A SINGLE ROW, LENGTHWISE, ORIENTED PARALLEL TO THE CONTOUR, WITH ENDS OF ADJACENT BALES TIGHTLY ABUTTING ONE ANOTHER.

B. BALES SHALL BE ENTRENCHED AND BACKFILLED. A TRENCH SHALL BE EXCAVATED THE WIDTH OF A BALE AND THE LENGTH OF THE PROPOSED BARRIER TO A MINIMUM DEPTH OF FOUR INCHES. AFTER THE BALES ARE STAKED, THE EXCAVATED SOIL SHALL BE BACKFILLED AGAINST THE BARRIER.

C. EACH BALE SHALL BE SECURELY ANCHORED BY AT LEAST TWO (2) STAKES.

D. THE GAPS BETWEEN BALES SHALL BE WEDGED WITH STRAW TO PREVENT WATER LEAKAGE.

E. THE BARRIER SHALL BE EXTENDED TO SUCH A LENGTH THAT THE BOTTOMS OF THE END BALES ARE HIGHER IN ELEVATION THAN THE TOP OF THE LOWEST MIDDLE BALE, TO ENSURE THAT RUN–OFF WILL FLOW EITHER THROUGH OR OVER THE BARRIER, BUT NOT AROUND IT.

CONSTRUCTION ENTRANCE PAD

A. CONSTRUCTION ENTRANCE PAD SHALL BE INSTALLED PRIOR TO CONSTRUCTION START AS SHOWN ON THE PLANS AND PER THE CONSTRUCTION ENTRANCE PAD DETAIL.

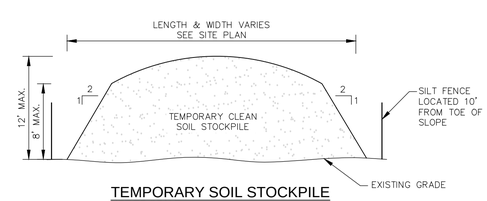


TEMPORARY SOIL STOCKPILE
NOT TO SCALE

### OPERATION AND MAINTENANCE OF TEMPORARY SOIL EROSION AND SEDIMENTATION CONTROL MEASURES

SILT FENCE

A. ALL SILT FENCES SHALL BE INSPECTED AFTER EACH RAINFALL. ALL DETERIORATED FABRIC AND DAMAGED POSTS SHALL BE REPLACED AND PROPERLY REPOSITIONED IN ACCORDANCE WITH THIS PLAN.

B. SEDIMENT DEPOSITS SHALL BE REMOVED FROM BEHIND THE FENCE WHEN THEY EXCEED A HEIGHT OF ONE FOOT.

HAYBALES

A. ALL HAYBALES SHALL BE INSPECTED FOLLOWING EACH RAINFALL. REPAIR OR REPLACEMENT SHALL BE PROMPTLY MADE AS NEEDED.

B. DEPOSITS SHALL BE REMOVED AND CLEANED–OUT WHEN ONE HALF OF THE ORIGINAL HEIGHT OF THE BALES BECOMES FILLED WITH SEDIMENT.

CONSTRUCTION ENTRANCE PAD

A. PROVIDE PERIODIC TOP DRESSING WITH ADDITIONAL STONE OR ADDITIONAL LENGTH AS CONDITIONS DEMAND. REPAIR ANY MEASURES USED TO TRAP SEDIMENT AS NEEDED. IMMEDIATELY REMOVE ALL SEDIMENT SPILLED, DROPPED, WASHED OR TRACKED ONTO PAVED SURFACES. ROADS ADJACENT TO CONSTRUCTION SITE SHALL BE LEFT CLEAN AT THE END OF THE DAY.

GENERAL

A. CONTRACTOR TO KEEP WEEKLY CHECKLIST LOGS FOR INSPECTIONS OF ALL SEDIMENT AND EROSION CONTROL DEVICES AND HAVE THEM READILY AVAILABLE ON–SITE AT ALL TIMES FOR INSPECTION BY DEEP, LOCAL AUTHORITIES OR ENGINEER.

### CONTINGENCY EROSION PLAN

SHOULD UNFORESEEN EROSION OR SEDIMENTATION PROBLEMS ARISE, THE DESIGN ENGINEER OF RECORD (ZUVIC, CARR AND ASSOCIATES) AND LOCAL ENFORCEMENT AGENT SHALL BE NOTIFIED IMMEDIATELY. AN INSPECTION OF THE AFFECTED AREA(S) SHALL BE PROMPTLY PERFORMED. A REMEDIAL ACTION PLAN SHALL BE FORMULATED WITH THE LOCAL ENFORCEMENT AGENT'S APPROVAL. THE SITE CONTRACTOR SHALL THEN IMPLEMENT THE RECOMMENDED COURSE OF ACTION WHICH HAS BEEN DETERMINED BY BOTH THE ENGINEER AND LOCAL ENFORCEMENT AGENT.

TO AVOID ANY BUT THE UNFORESEEN PROBLEMS, A WEEKLY JOB MEETING SHALL BE CONDUCTED WITH THE ENGINEER AND CONTRACTOR. AT THIS MEETING, SEDIMENTATION AND EROSION CONTROL SHALL BE ON THE AGENDA. ISSUES WHICH MAY ARISE SHALL BE ADDRESSED BY THE SITE CONTRACTOR IN A TIMELY MANNER.

CONTRACTOR SHALL MAINTAIN ON SITE EXTRA SILT FENCE (200') AND EXTRA HAYBALES (40) TO ADDRESS UNFORSEEN EROSION AND SEDIMENT CONTROL NEEDS.

## PERMANENT MAINTENANCE NOTES

1. 10' BITUMINOUS TRAIL SHALL BE SWEPT ANNUALLY AFTER SPRING FLOODING TO REMOVE ANY ACCUMULATED SILT AND OTHER DEPOSITS.
2. TREES AND UNDERGROWTH SHALL BE TRIMMED AS NEEDED TO MAINTAIN CLEAR WALKING PATHS.
3. TRAILS SHALL BE INSPECTED AFTER SPRING FLOODING EVENT AND ANY DEPRESSIONS OR OTHER POTENTIAL TRIPPING HAZARDS SHALL BE ADDRESSED.
4. PERIODICALLY THROUGHOUT THE YEAR, TRASH AND OTHER MAN MADE DEBRIS SHALL BE REMOVED AND DISPOSED OF.
5. AN INVASIVE CONTROL PLAN SHALL BE PURSUED BY GOODWIN COLLEGE TO HELP CONTROL THE INVASIVE PLANTS WITHIN THE TRAIL CORRIDOR.

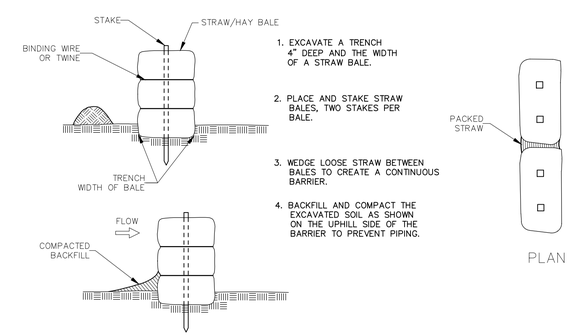


PLACEMENT AND CONSTRUCTION OF A STRAW /HAYBALE CHECK DAM
NOT TO SCALE

NOT FOR CONSTRUCTION

| REV. NO. | DATE | DRWN | CHKD | REMARKS |
|---|---|---|---|---|
| 1 | 08/2018 | SJH | GBS | PER TOWN COMMENTS |

PROJECT NO.: 1912
DESIGNED BY: SJH
DRAWN BY: SJH
SHEET CHK'D BY: GBS
CROSS CHK'D BY:
APPROVED BY: GBS
DATE: 7–13–18

PREPARED FOR:
GOODWIN COLLEGE
ONE RIVERSIDE DRIVE
EAST HARTFORD, CT

PREPARED BY:
ZUVIC·CARR AND ASSOCIATES
CONSULTING ENGINEERS
40 Cold Spring Road • Rocky Hill, CT 06067
Phone 860.436.4901 • Fax 860.436.4953

SOUTH MEADOWS MULTI-USE RECREATIONAL TRAIL
EAST HARTFORD, CT

PHASE I & II PAVING
SITE DETAILS

SHEET NO.
CE-3

FILE PATH: H:\Projects\Goodwin College\1912 - South Meadows Trail\AutoCAD\C\1912 - Details Phase 1&2 Paving.dwg PLOT DATE: 8/28/2018 PLOT TIME: 2:32:46 PM