TOWN OF EAST HARTFORD
PLANNING & ZONING COMMISSION
APPLICATION FORM

DATE: 1/30/18

Official Receipt Date: 1/30/18

1. APPLICATION TYPE: (CHECK ALL THAT APPLY) ***COMPLETE SECTION ON PAGE 2 OR 3**

- [x] SITE PLAN APPLICATION
- [ ] SITE PLAN MODIFICATION
- [ ] FLOOD HAZARD – MAJOR*
- [ ] FLOOD HAZARD – MINOR*
- [ ] NATURAL RESOURCES REMOVAL AND FILLING
- [ ] SPECIAL USE PERMIT*
- [ ] ZONING MAP CHANGE*
- [ ] TEXT AMENDMENT*
- [x] SOIL EROSION AND SEDIMENTATION - Cumulative disturbed area (sq. ft.): 65 600 SF

2. SITE AND PROJECT INFORMATION

PROPERTY ADDRESS: 15 Mercer Avenue ZONE: R-4

ASSESSORS MAP AND LOT: 23/174 PARCEL SIZE (ACRES OR SQ. FT.): 4.305

PROJECT NAME: Proposed Parking Lot Improvements - Silver Lane School

PROJECT DESCRIPTION (ATTACH ADDITIONAL SHEETS IF NEEDED):

Reconstruction and expansion of existing parking lot.

3. PROPERTY OWNER INFORMATION [ ] CHECK IF PRIMARY CONTACT

OWNER OF RECORD: Town of East Hartford

OWNER ADDRESS: 740 Main Street

OWNER PHONE: (860) 622-5952 OWNER EMAIL: whittaker.bp@easthartford.org

OWNER SIGNATURE: PRINT NAME: Ben Whittaker

The undersigned owner hereby authorizes: **(1)** this application, and **(2)** the Planning and Zoning Commission and Town of East Hartford staff the right to enter upon the property for the purposes of inspection associated with this application.

4. APPLICANT INFORMATION [ ] CHECK IF PRIMARY CONTACT

[x] CHECK IF APPLICANT IS SAME AS PROPERTY OWNER

APPLICANT: BEN WHITTAKER

APPLICANT ADDRESS:

APPLICANT PHONE: APPLICANT EMAIL:

APPLICANT SIGNATURE: PRINT NAME:

5. DESIGN PROFESSIONAL INFORMATION [ ] CHECK IF PRIMARY CONTACT

FIRM: Alfred Benesch & Co. PHONE: (860) 633-8341 x-7233

CONTACT PERSON: Russell N. Cyr, P.E. EMAIL: rcyr@benesch.com

PERMIT APPLICATION
FOR
PROPOSED PARKING LOT IMPROVEMENTS
SILVER LANE SCHOOL
15 MERCER AVENUE
EAST HARTFORD, CT

DATE: FEBRUARY 8, 2018

PLANNING & ZONING PERMIT APPLICATIONS:

1. MODIFICATION OF SITE PLAN APPROVAL
2. SOIL EROSION AND SEDIMENTATION CONTROL

ZONE	MAP - LOT
R4	23 - 174

OWNER / APPLICANT:

East Hartford Public Schools
74 Tolland Street
East Hartford, CT 06108

CONSULTANTS

benesch

Alfred Benesch & Company • www.benesch.com
90 National Drive • Glastonbury, Connecticut 06033
Phone: (860) 633-8341 • Fax: (860) 633-1068

TO DESIGN

114 West Main Street, Suite 201
New Britain, CT 06051
P 860.612.1700
F 860.612.1757

LIST OF DRAWINGS

CS	COVER SHEET
SV.01	BOUNDARY/TOPOGRAPHIC SURVEY
C-0	DEMOLITION PLAN
C-1	PROPOSED SITE PLAN
C-2	PROPOSED GRADING PLAN
C-3	SEDIMENTATION & EROSION CONTROL PLAN
C-4	SITE DETAILS
C-5	SITE DETAILS
C-6	SITE DETAILS
C-7	SITE DETAILS
C-9	SEDIMENTATION AND EROSION CONTROL NOTES, NARRATIVE AND DETAILS
L-1.0	PLANTING PLAN
L-2.0	SITE DETAILS
L-3.0	PHOTOMETRIC PLAN

VICINITY MAP
SCALE: N.T.S.

JOB NO: 70445.00

LEGEND

BITUMINOUS PAVING AND BASE TO BE REMOVED	
SOIL TO BE EXCAVATED	
SITE ITEM TO BE REMOVED	×

benesch
engineers · scientists · planners
Alfred Benesch & Company • www.benesch.com
120 Hebron Avenue • Glastonbury, Connecticut 06033
Phone: (860) 633-8341 • Fax: (860) 633-1068

Prepared For:

East Hartford Public Schools
74 Tolland Street
East Hartford, CT

PARKING LOT IMPROVEMENT PLAN FOR: SILVER LANE SCHOOL

15 MERCER AVENUE EAST HARTFORD, CT

DATE:	REVISION:

PROJECT NO.: 70445
SCALE: 1"=30'
DATE: 2-8-18

DRAWN BY: RNC
CHECKED BY: RSN

SITE DEMOLITION PLAN

DRAWING NO.: C-0

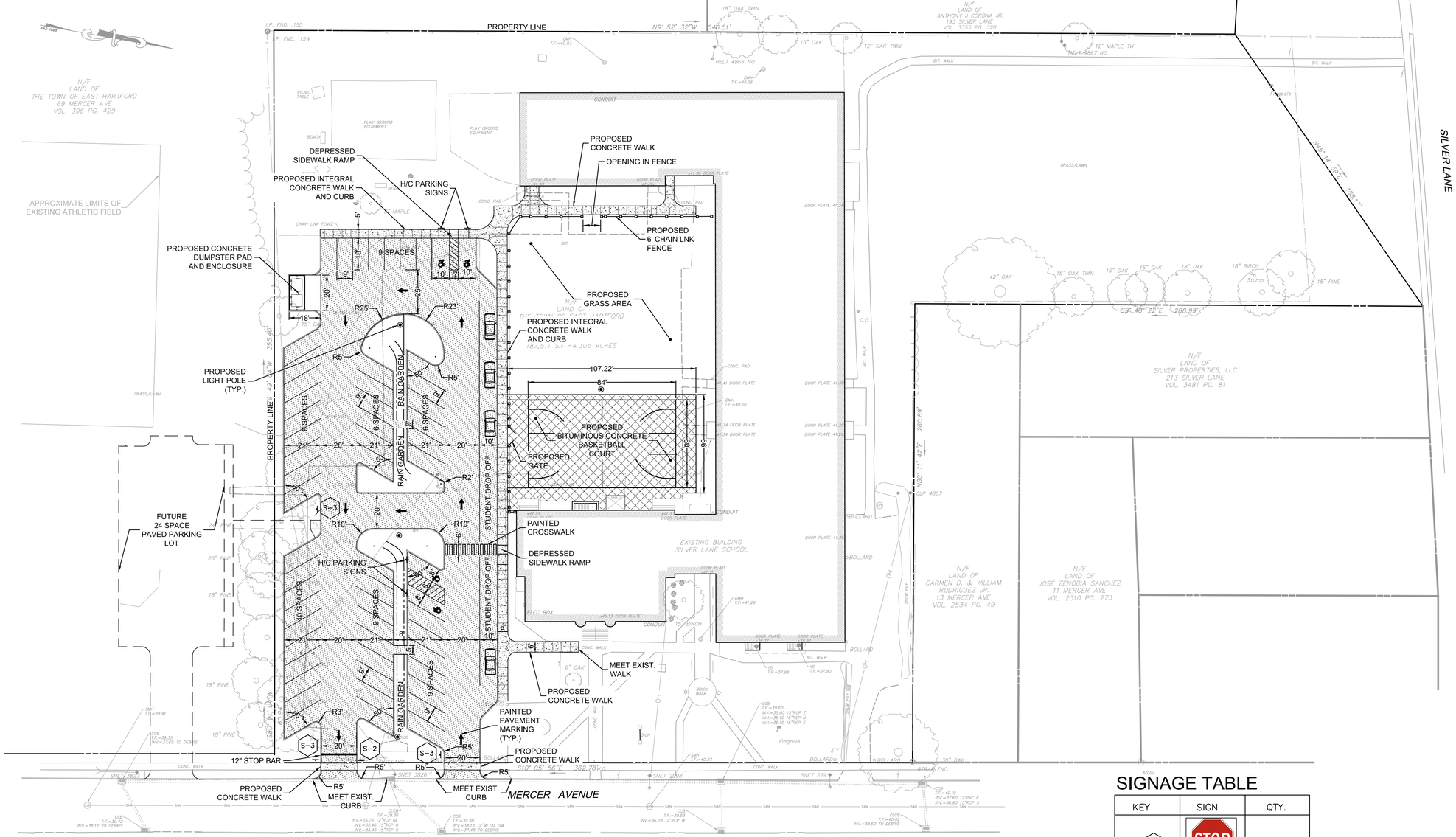

PARKING SPACE COUNT

EXISTING - 66 SPACES
PROPOSED - 82 SPACES

LEGEND

PROPOSED VEHICULAR BITUMINOUS CONCRETE PAVEMENT

PROPOSED PEDESTRIAN BITUMINOUS CONCRETE PAVEMENT

PROPOSED CONCRETE WALK

SIGNAGE TABLE

KEY	SIGN	QTY.
S-1	STOP R1-1 31-0553	1
S-2	DO NOT ENTER 31-1109	1
S-3	ONE WAY 31-1177	2

benesch
engineers · scientists · planners
Alfred Benesch & Company • www.benesch.com
120 Hebron Avenue • Glastonbury, Connecticut 06033
Phone: (860) 633-8341 • Fax: (860) 633-1068

Prepared For:

East Hartford Public Schools
74 Tolland Street
East Hartford, CT

PARKING LOT IMPROVEMENT PLAN FOR:
SILVER LANE SCHOOL
15 MERCER AVENUE EAST HARTFORD, CT

DATE:	REVISION:

PROJECT NO.: 70445
SCALE: 1"=30'
DATE: 2-8-18
DRAWN BY: RNC
CHECKED BY: RSN

SITE PLAN

DRAWING NO.:
C-1

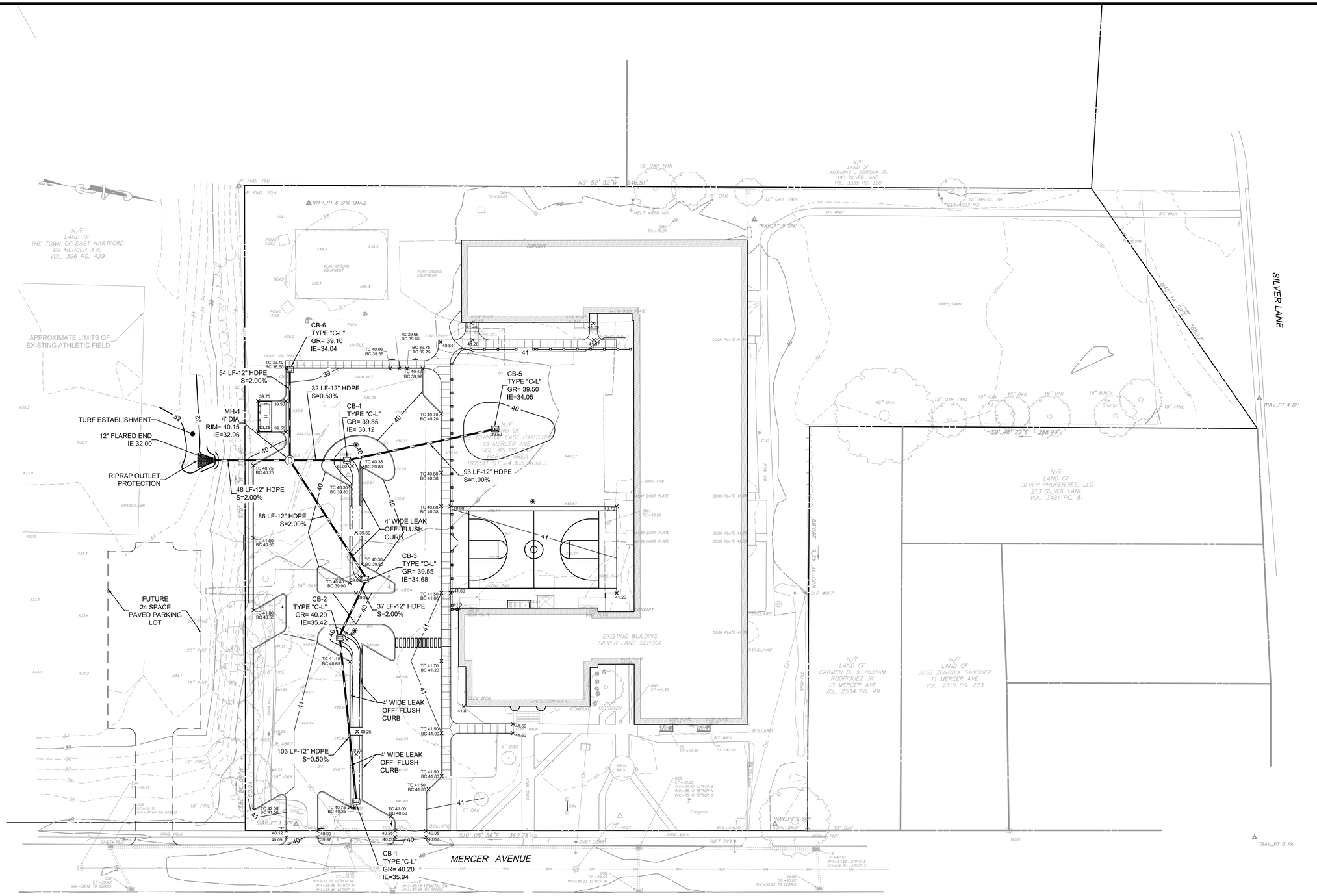

benesch
engineers · scientists · planners
Alfred Benesch & Company • www.benesch.com
120 Hebron Avenue • Glastonbury, Connecticut 06033
Phone: (860) 633-8341 • Fax: (860) 633-1068

Prepared For:

East Hartford
Public Schools
74 Tolland Street
East Hartford, CT

PARKING LOT IMPROVEMENT PLAN FOR:

SILVER LANE SCHOOL

15 MERCER AVENUE **EAST HARTFORD, CT**

DATE:	REVISION:

PROJECT NO.: 70445
SCALE: 1"=30'
DATE: 2-8-18

DRAWN BY: RNC
CHECKED BY: RSN

PROPOSED GRADING AND DRAINAGE PLAN

DRAWING NO.: C-2

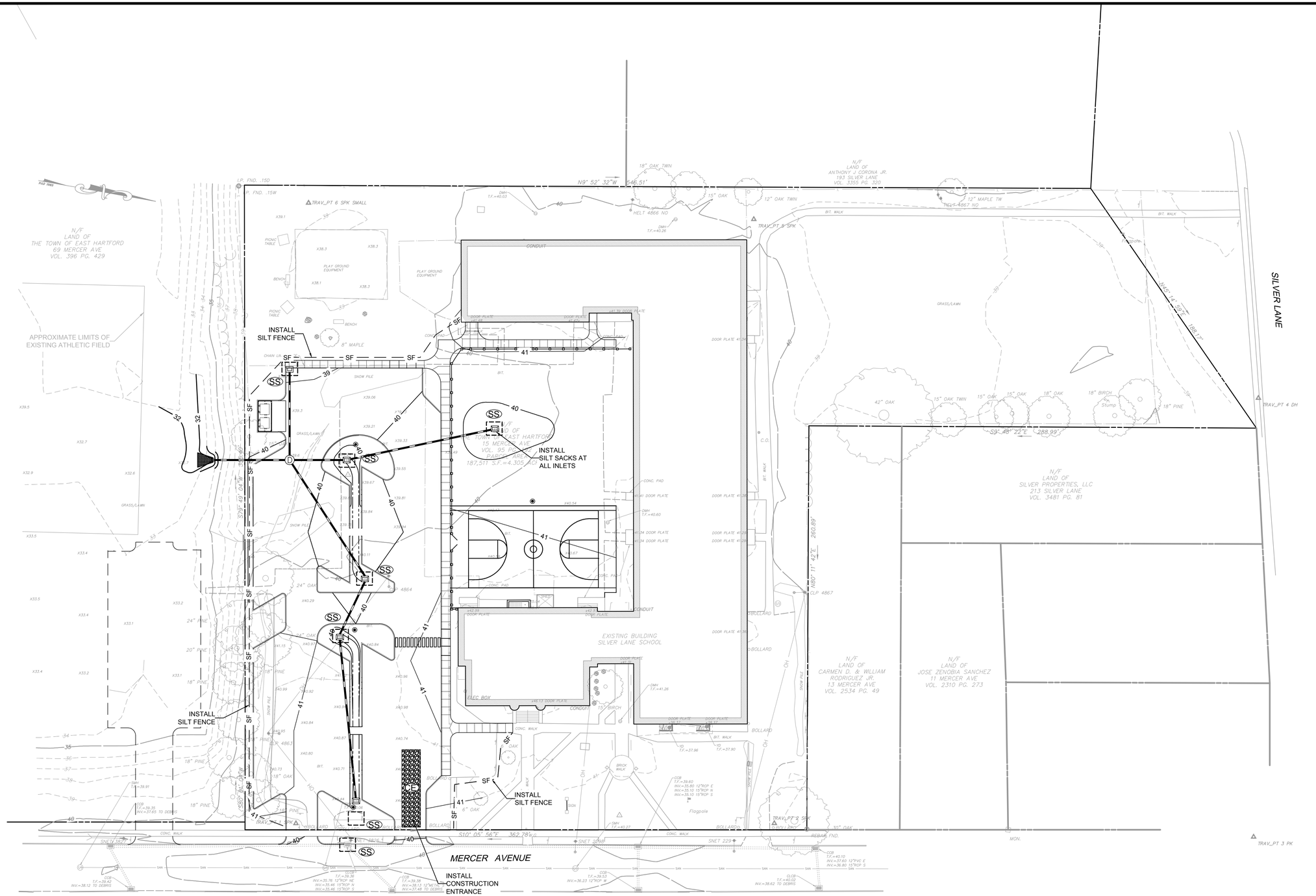

LEGEND

SILT FENCE	— — —SF— — —
SILT SACKS	SS
CONST. ENTRANCE	CE
TREE PROTECTION	

benesch
engineers · scientists · planners
Alfred Benesch & Company • www.benesch.com
120 Hebron Avenue • Glastonbury, Connecticut 06033
Phone: (860) 633-8341 • Fax: (860) 633-1068

Prepared For:

East Hartford Public Schools
74 Tolland Street
East Hartford, CT

PARKING LOT IMPROVEMENT PLAN FOR:
SILVER LANE SCHOOL
15 MERCER AVENUE EAST HARTFORD, CT

DATE:	REVISION:

PROJECT NO.: 70445
SCALE: 1"=30'
DATE: 2-8-18
DRAWN BY: RNC
CHECKED BY: RSN

PROPOSED SEDIMENTATION AND EROSION CONTROL PLAN

DRAWING NO.: C-3

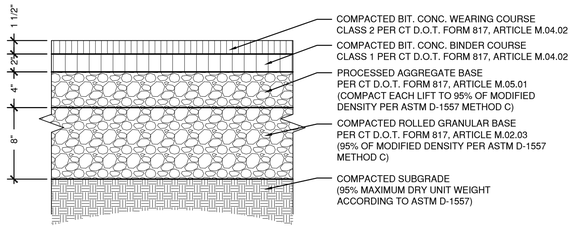

1 BITUMINOUS CONC. PAVEMENT

N.T.S. (VEHICULAR)

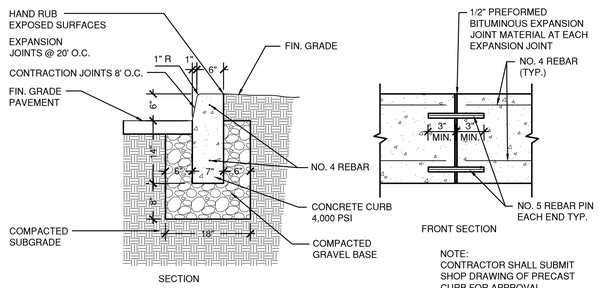

NOTE:
CONTRACTOR SHALL SUBMIT
SHOP DRAWING OF PRECAST
CURB FOR APPROVAL.

2 PRECAST CONCRETE CURB

SCALE: 3/4"=1'-0"

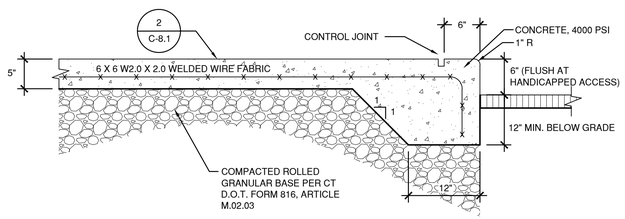

3 INTEGRAL CONCRETE CURB

SCALE 1" = 1'-0"

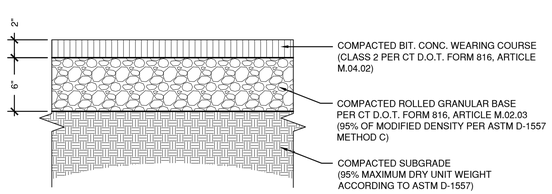

4 BITUMINOUS CONC. PAVEMENT

SCALE 1 1/2" = 1'-0" (PEDESTRIAN)

NOTES:

1. PROVIDE EXPANSION JOINTS FOR NEW CONCRETE PAVING POLE BASES, MANHOLES, GRATES/VAULTS, EXISTING CONCRETE PAVING AND ALL OTHER FIXED MATERIALS.
2. AIR CURING IS NOT ACCEPTABLE. SEE SPECIFICATIONS.

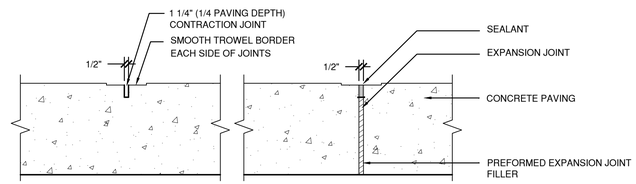

EXPANSION & CONTRACTION JOINTS

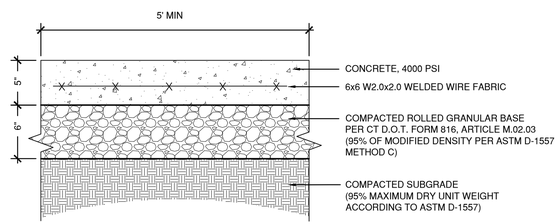

5 CONCRETE WALK

Scale 1 1/2" = 1' -0"

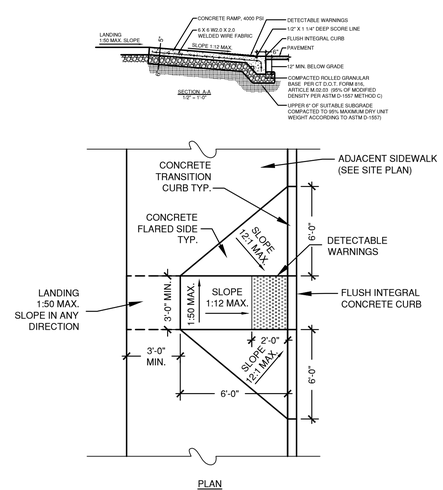

6 CURB RAMP

1/4" = 1'-0"

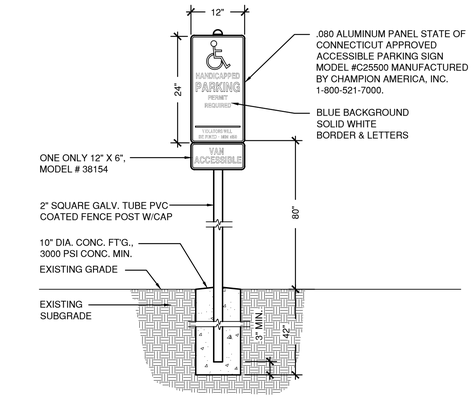

7 HANDICAP PARKING SIGN

SCALE 3/4" = 1'-0"

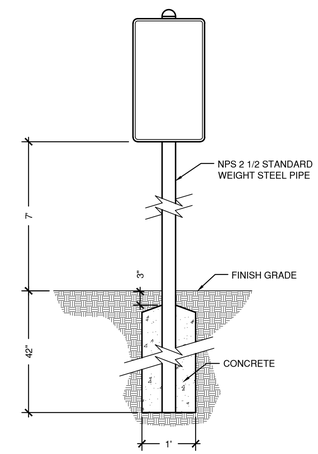

8 SIGNAGE POST

SCALE: 3/4"=1'-0"

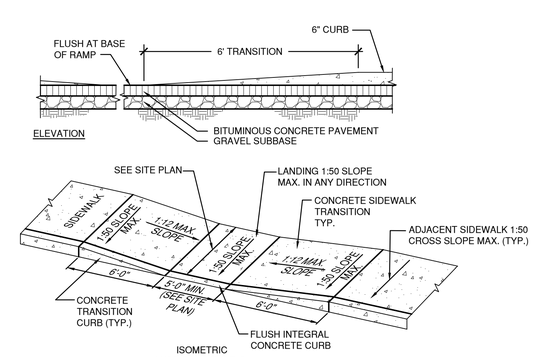

9 DEPRESSED SIDEWALK RAMP

SCALE 1/2" = 1'-0"

benesch
engineers • scientists • planners
Alfred Benesch & Company • www.benesch.com
120 Hebron Avenue • Glastonbury, Connecticut 06033
Phone: (860) 633-8341 • Fax: (860) 633-1068

Prepared For:

East Hartford
Public Schools
74 Tolland Street
East Hartford, CT

PARKING LOT IMPROVEMENT PLAN FOR:
SILVER LANE SCHOOL
15 MERCER AVENUE EAST HARTFORD, CT

DATE:	REVISION:
1 2-26-16	PER REVIEW COMMENTS
2 3-11-16	P & Z APPLICATION
3 1-12-17	CONSTRUCTION DOCUMENTS

PROJECT NO.: 70445
SCALE: N.T.S.
DATE: 2-8-18
DRAWN BY: RNC
CHECKED BY: RSN

SITE DETAILS

DRAWING NO.:
C-4

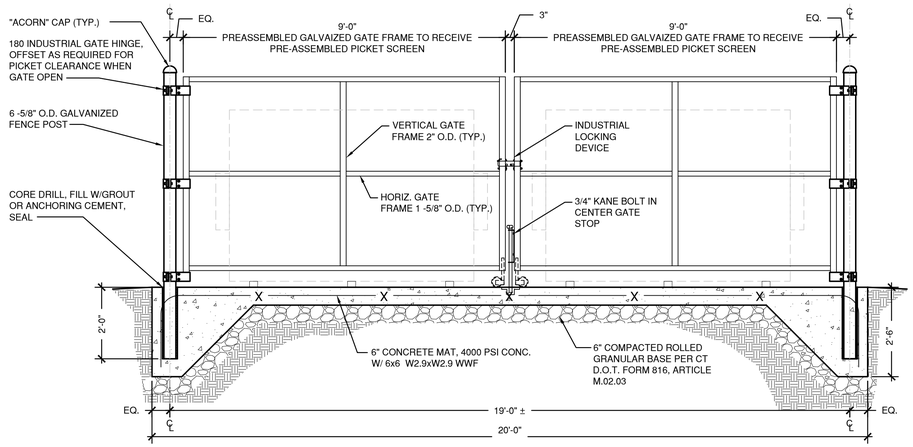

SECTION A-A

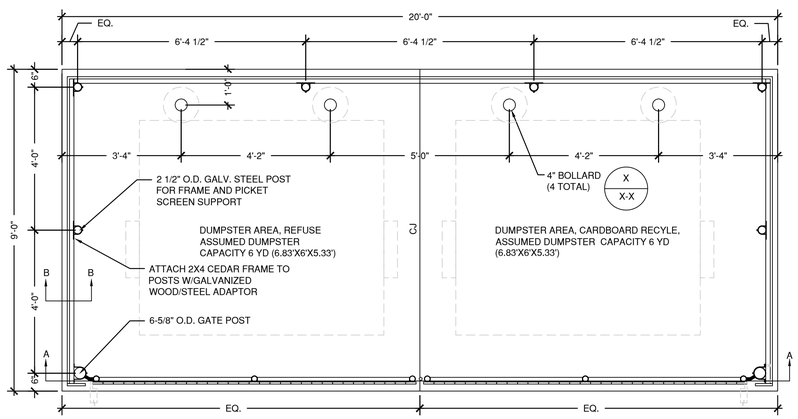

1 DUMPSTER ENCLOSURE

SCALE: 1/2"=1'-0"

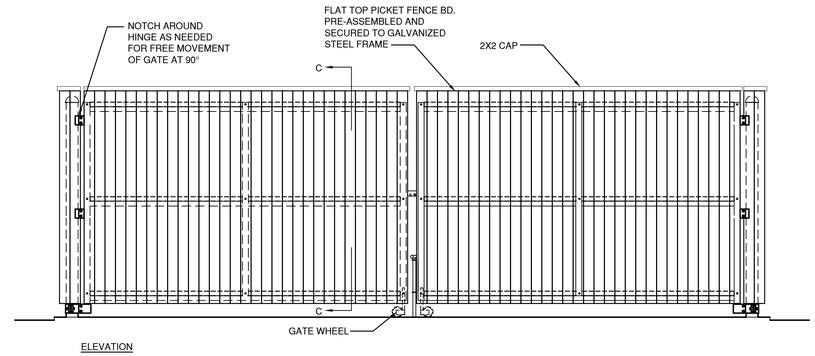

ELEVATION

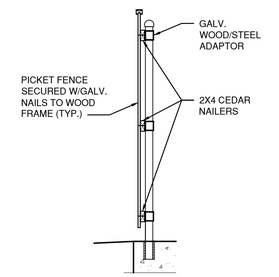

SECTION B-B

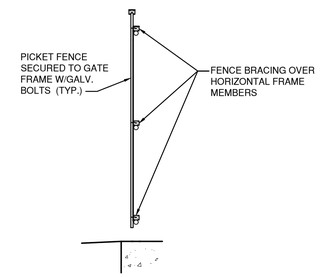

SECTION C-C

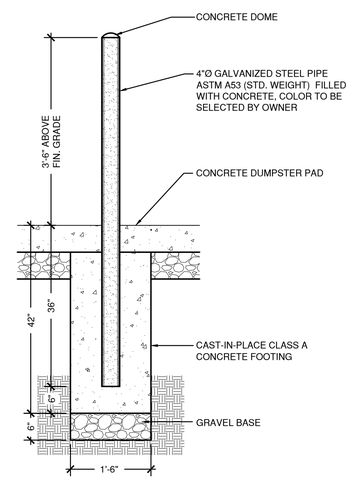

2 4" STEEL BOLLARD

SCALE: N.T.S.

benesch
engineers · scientists · planners
Alfred Benesch & Company • www.benesch.com
120 Hebron Avenue • Glastonbury, Connecticut 06033
Phone: (860) 633-8341 • Fax: (860) 633-1068

Prepared For:

East Hartford Public Schools
74 Tolland Street
East Hartford, CT

PARKING LOT IMPROVEMENT PLAN FOR:
SILVER LANE SCHOOL
15 MERCER AVENUE EAST HARTFORD, CT

DATE:	REVISION:
1 2-26-16	PER REVIEW COMMENTS
2 3-11-16	P & Z APPLICATION
3 1-12-17	CONSTRUCTION DOCUMENTS

PROJECT NO.: 70445
SCALE: N.T.S.
DATE: 2-8-18
DRAWN BY: RNC
CHECKED BY: RSN

SITE DETAILS

DRAWING NO.:
C-5

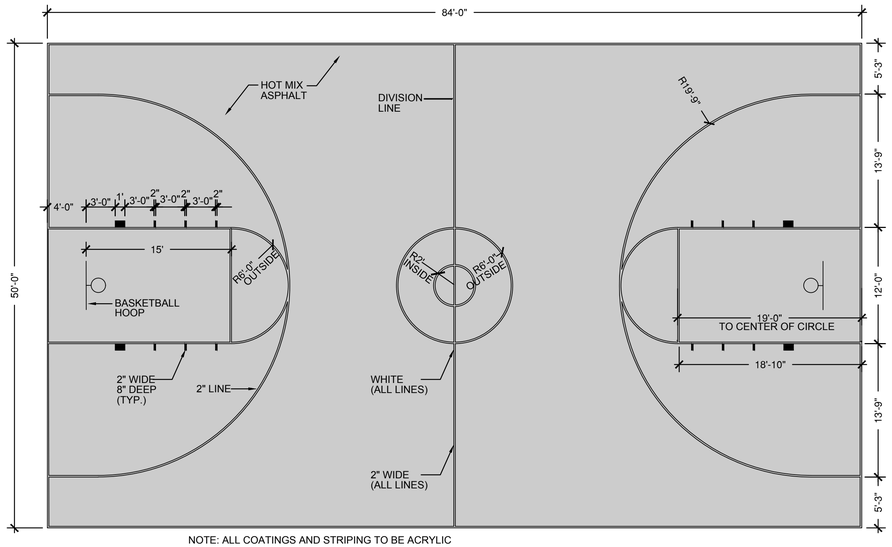

NOTE: ALL COATINGS AND STRIPING TO BE ACRYLIC

1 BASKETBALL COURT LAYOUT

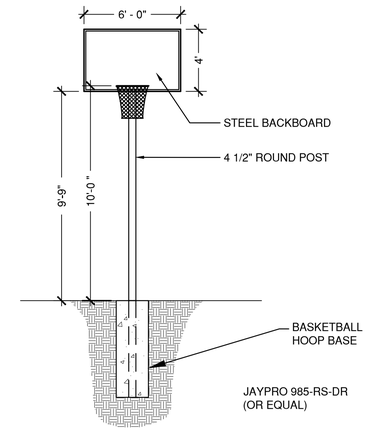

2 BASKETBALL HOOP

SCALE: N.T.S.

SCALE: N.T.S.

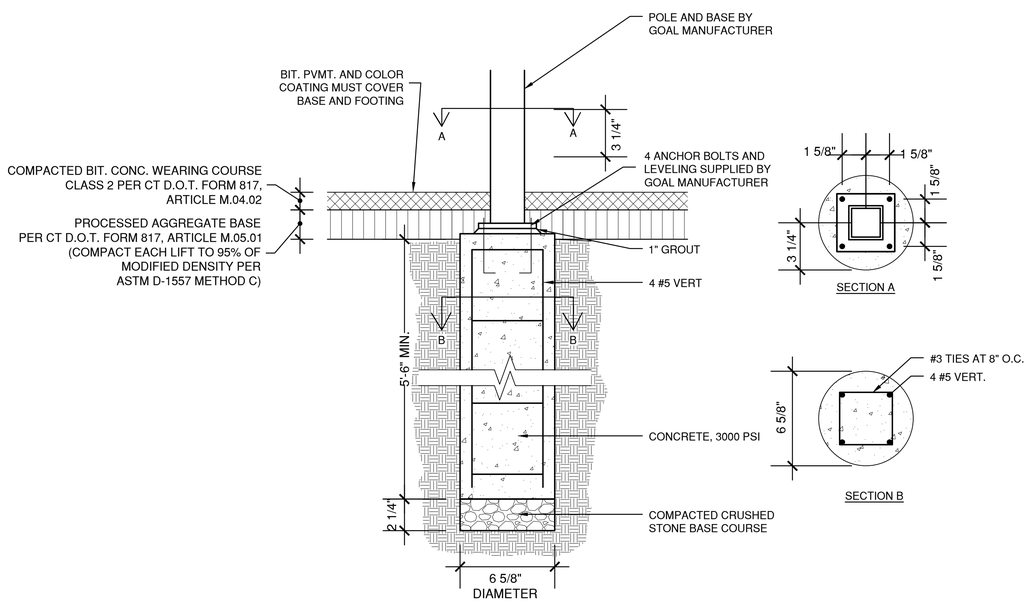

3 BASKETBALL HOOP BASE

SCALE: N.T.S.

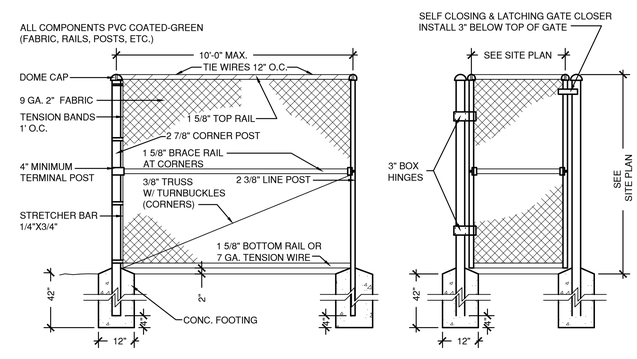

4 CHAIN LINK FENCE & GATE THERMALLY FUSED PVC COATING

SCALE: 1/2"=1'-0"

benesch
engineers • scientists • planners
Alfred Benesch & Company • www.benesch.com
120 Hebron Avenue • Glastonbury, Connecticut 06033
Phone: (860) 633-8341 • Fax: (860) 633-1068

Prepared For:

East Hartford Public Schools
74 Tolland Street
East Hartford, CT

PARKING LOT IMPROVEMENT PLAN FOR:
SILVER LANE SCHOOL
15 MERCER AVENUE EAST HARTFORD, CT

DATE:	REVISION:

PROJECT NO.: 70445
SCALE: N.T.S.
DATE: 2-8-18
DRAWN BY: RNC
CHECKED BY: RSN

SITE DETAILS

DRAWING NO.:
C-6

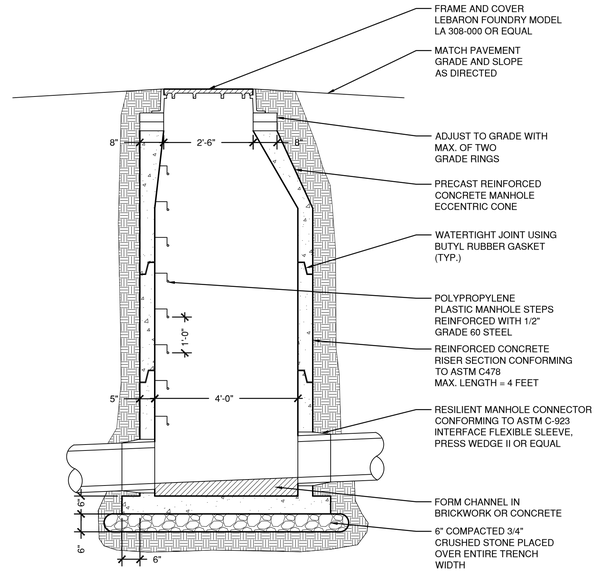

1 STORM MANHOLE
SCALE: 1/2"=1'-0"

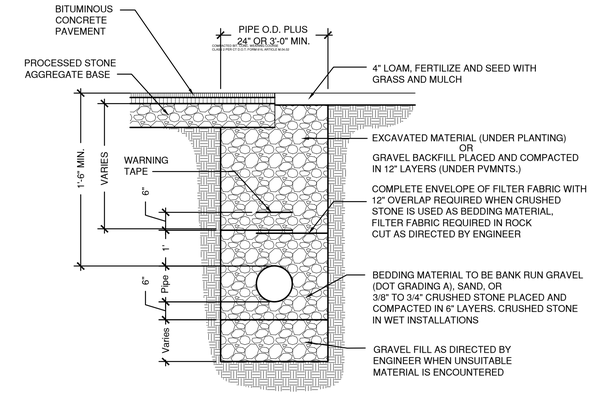

3 STORM / SANITARY TRENCH
N.T.S.

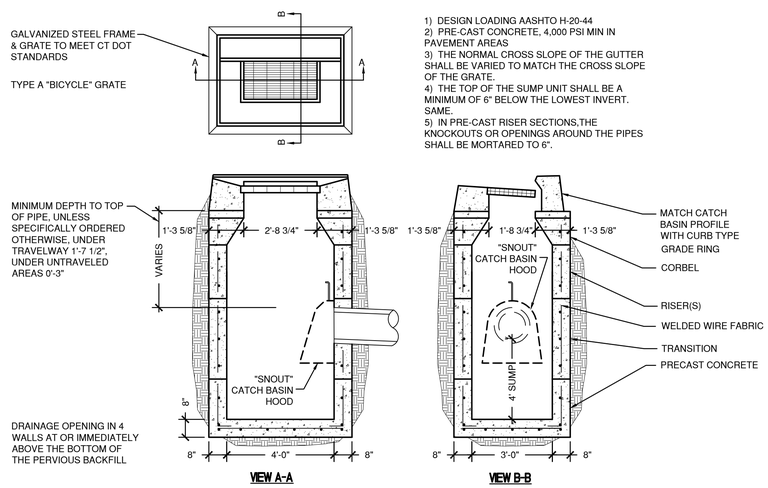

1) DESIGN LOADING AASHTO H-20-44
2) PRE-CAST CONCRETE, 4,000 PSI MIN IN PAVEMENT AREAS
3) THE NORMAL CROSS SLOPE OF THE GUTTER SHALL BE VARIED TO MATCH THE CROSS SLOPE OF THE GRATE.
4) THE TOP OF THE SUMP UNIT SHALL BE A MINIMUM OF 6" BELOW THE LOWEST INVERT. SAME.
5) IN PRE-CAST RISER SECTIONS,THE KNOCKOUTS OR OPENINGS AROUND THE PIPES SHALL BE MORTARED TO 6".

2 PRECAST CATCH BASIN
N.T.S.

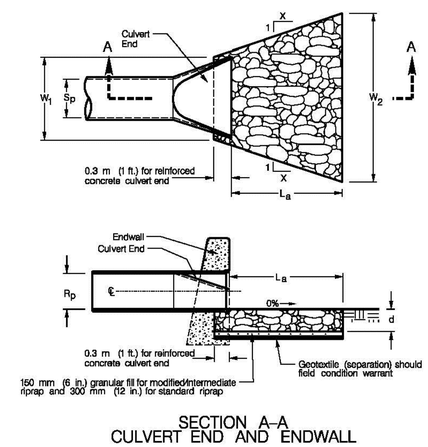

SECTION A–A
CULVERT END AND ENDWALL

LEGEND

S_p = Max. inside pipe span (non-circular sections) / Inside pipe diameter (circular sections)

R_p = Max. inside pipe rise (non-circular sections) / Inside pipe diameter (circular sections)

L_a = Length of riprap apron measured from the end of culvert end section or face of endwall

d = 300 mm (12 in.) Modified Riprap / 450 mm (18 in.) Intermediate Riprap / 900 mm (36 in.) Standard Riprap

	X	W_1	W_2
Type A Riprap Apron	3	$3S_p$	$3S_p+0.7$ La
Type B Riprap Apron	5	$3S_p$	$3S_p+0.4$ La

4 RIPRAP OUTLET PROTECTION
N.T.S.

benesch
engineers • scientists • planners
Alfred Benesch & Company • www.benesch.com
120 Hebron Avenue • Glastonbury, Connecticut 06033
Phone: (860) 633-8341 • Fax: (860) 633-1068

Prepared For:
East Hartford
Public Schools
74 Tolland Street
East Hartford, CT

PARKING LOT IMPROVEMENT PLAN FOR:
SILVER LANE SCHOOL
15 MERCER AVENUE EAST HARTFORD, CT

DATE:	REVISION:

PROJECT NO.: 70445
SCALE: N.T.S.
DATE: 2-8-18
DRAWN BY: RNC
CHECKED BY: RSN

SITE DETAILS

DRAWING NO.:
C-7

EROSION AND SEDIMENTATION CONTROL NARRATIVE FOR SILVER LANE SCHOOL PARKING LOT IMPROVEMENTS EAST HARTFORD, CONNECTICUT

I. INTRODUCTION

This erosion and sediment control plan has been prepared as part of the construction plans for the Silver Lane School Parking Lot Improvement project in East Hartford, CT.

II. NARRATIVE

A. DESCRIPTION OF DEVELOPMENT

The proposed project consists of the reconstruction of the existing paved parking.

B. CONSTRUCTION AND GRADING SCHEDULE

1. GENERAL

a. The following schedule is to serve as a general guide to the sequence of construction activities for sediment and erosion control measures.

b. The dates given below are approximate to give an indication of overall construction sequence. Construction to take place in the summer of 2018 at the end of the school year.
Start Construction June 25, 2018 (Approximate)
Complete Construction August 13, 2018

2. CONSTRUCTION SEQUENCE

a. Clearing and Grubbing

(1.)Install Temporary Construction Entrance as shown on the drawings or as directed by the Engineer.

(2.)Clear all trees and appurtenances within the proposed project area that are not designated to remain. Contractor shall verify with the Engineer removal of any trees over 12" in diameter. Dispose of cleared items at an approved off-site disposal area.

b. Erosion and Sediment Control

(1.)Install silt fence as shown on the drawings or as directed by the Engineer.

c. Site Excavation and Grading

(1.)Strip and Stock topsoil. Install hay bales and silt fence around stockpile as required.

(2.)Relocate or install additional silt fence or hay bales to fully enclose and control all work areas as directed by the Engineer.

(3.)As site excavation progresses, provide temporary channels or berms as necessary to direct site runoff to the proposed or existing drainage structures as directed by the Engineer.

(4.)The contractor shall stockpile all excess excavated material at locations shown on the drawings or as directed by the Engineer. Haybales shall be placed around the perimeter of all stockpiles. excess material which will not be reused shall be taken offsite immediately.

(5.)Replace clogged sedimentation control bales as required and clean sediment from basins when accumulation sediment exceeds 8" in depth.

d. Storm Drainage Structures

(1.)As soon as possible construct storm drainage systems on-site.

(2.)Following construction of catch basins and other inlets, provide hay bales and/or silt fence around all inlets to prevent sediment from entering newly constructed or existing drainage systems.

e. Rough Grading and Paving Sediment and erosion controls within the parking areas shall be left in place until immediately before paving. Measures outside of the paved area shall remain until a stable vegetative growth has been established on all slopes or until directed by the Engineer.

f. Final Items

Clean all catch basins and storm manholes of all accumulated sediment as directed by the Engineer.

3. CONTINGENCY PLANS FOR FAILED EROSION AND SEDIMENTATION CONTROL MEASURES

Failed erosion and sedimentation control measures will be evaluated on a case by case basis by the Engineer and appropriate measures taken. These measures may include cleaning and/or replacement of defective facilities or installation of new or supplemental facilities.

C. DESIGN CRITERIA

The following design references were followed for the preparation of storm drainage design and erosion and sediment control plans:
1. Connecticut DOT Drainage Manual
2. Connecticut Guidelines for Soil Erosion and Sedimentation Control dated 1985, as amended.

D. CONSTRUCTION DETAILS

Construction details for the proposed project are presented on the detail sheets.

E. INSTALLATION PROCEDURES

The installation procedures for stormwater management facilities and erosion and sedimentation control measures are presented in the Connecticut Guidelines for Soil Erosion and Sedimentation Control dated 1985, as amended. Additional installation procedures are shown on the construction details both visually and by use of construction notes.

F. OPERATION AND MAINTENANCE

1. DURING CONSTRUCTION

Best management practices, shall be utilized to control storm water discharges and to prevent erosion and sedimentation and to otherwise prevent pollution of wetlands or watercourses. For information and technical assistance, contact the Town Planner. The permittee shall immediately inform the Planning Department of any problems involving wetlands or watercourses which have developed in the course of, or which are caused by, the authorized work.

No equipment or material including without limitation, fill, construction materials, or debris, shall be deposited, placed, or stored in any wetland or watercourse on or off site.

Timely implementation and maintenance of sediment and erosion control measures are required. All sediment and erosion control measures must be maintained until all disturbed areas are stabilized.

A pre-construction meeting shall be held prior to the commencement of any construction activities on the site with the owner, contractor, and Town staff.

As contained in the Sedimentation and Erosion Control Specifications, operations and maintenance during construction will consist of periodic replacement and/or cleaning of clogged hay bales, silt fence and construction entrance at no additional cost to the owner. Any temporary sedimentation basins will be cleaned of accumulated sediment when the depth of accumulated sediment exceeds 8". All drainage structures shall be inspected on daily basis and any necessary corrective action taken.

2. LONG TERM

Upon completion of construction, all subsurface stormwater detention systems and storm water manholes will be cleaned of all accumulated sediment. Thereafter, an inspection should be made by the owner after each storm event and each spring following the end of all pavement sanding operations. Sediment shall be removed whenever the thickness of accumulated sediment reaches 12" or more. More frequent inspection and cleaning may be required and will be determined once the system is in operation.

The landscaping should be inspected on a yearly basis and selected replacement of trees, shrubs and ground cover made as required.

All parking areas, sidewalks, and driveways shall be swept clean of sand, litter and any other possible pollutants at least once a month between December 1 and April 30 and every other month at all other times.

G. DESIGNATED ON-SITE AGENT

1. The person responsible for overseeing of proper installation and maintenance of all soil erosion sediment control measures for this project shall be the Construction Manager.

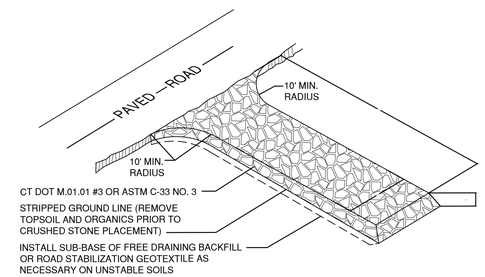

4 CONSTRUCTION ENTRANCE (CE)
N.T.S.

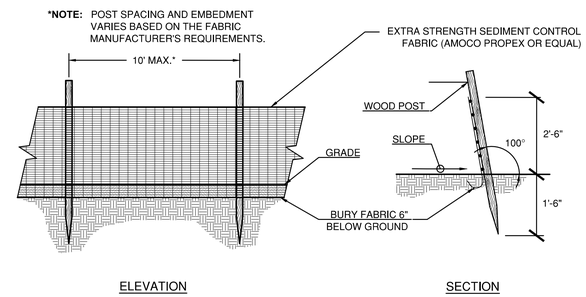

7 SILT FENCE
N.T.S.

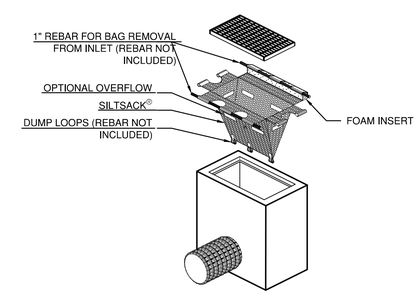

'SILTSACK' SEDIMENT CONTROL DEVICE, TERRAFIX GEOSYNTHETICS INC. TORONTO, ONTARIO, CA WWW.TERRAFIXGEO.COM

8 SILT SACK (SS)
N.T.S.

benesch
engineers • scientists • planners
Alfred Benesch & Company • www.benesch.com
120 Hebron Avenue • Glastonbury, Connecticut 06033
Phone: (860) 633-8341 • Fax: (860) 633-1068

Prepared For:
East Hartford Public Schools
74 Tolland Street
East Hartford, CT

PARKING LOT IMPROVEMENT PLAN FOR:
SILVER LANE SCHOOL
15 MERCER AVENUE EAST HARTFORD, CT

DATE:	REVISION:

PROJECT NO.: 70445
SCALE: N.T.S.
DATE: 2-8-18
DRAWN BY: RNC
CHECKED BY: RSN

SEDIMENTATION & EROSION CONTROL NOTES, NARRATIVE AND DETAILS

DRAWING NO.: C-9

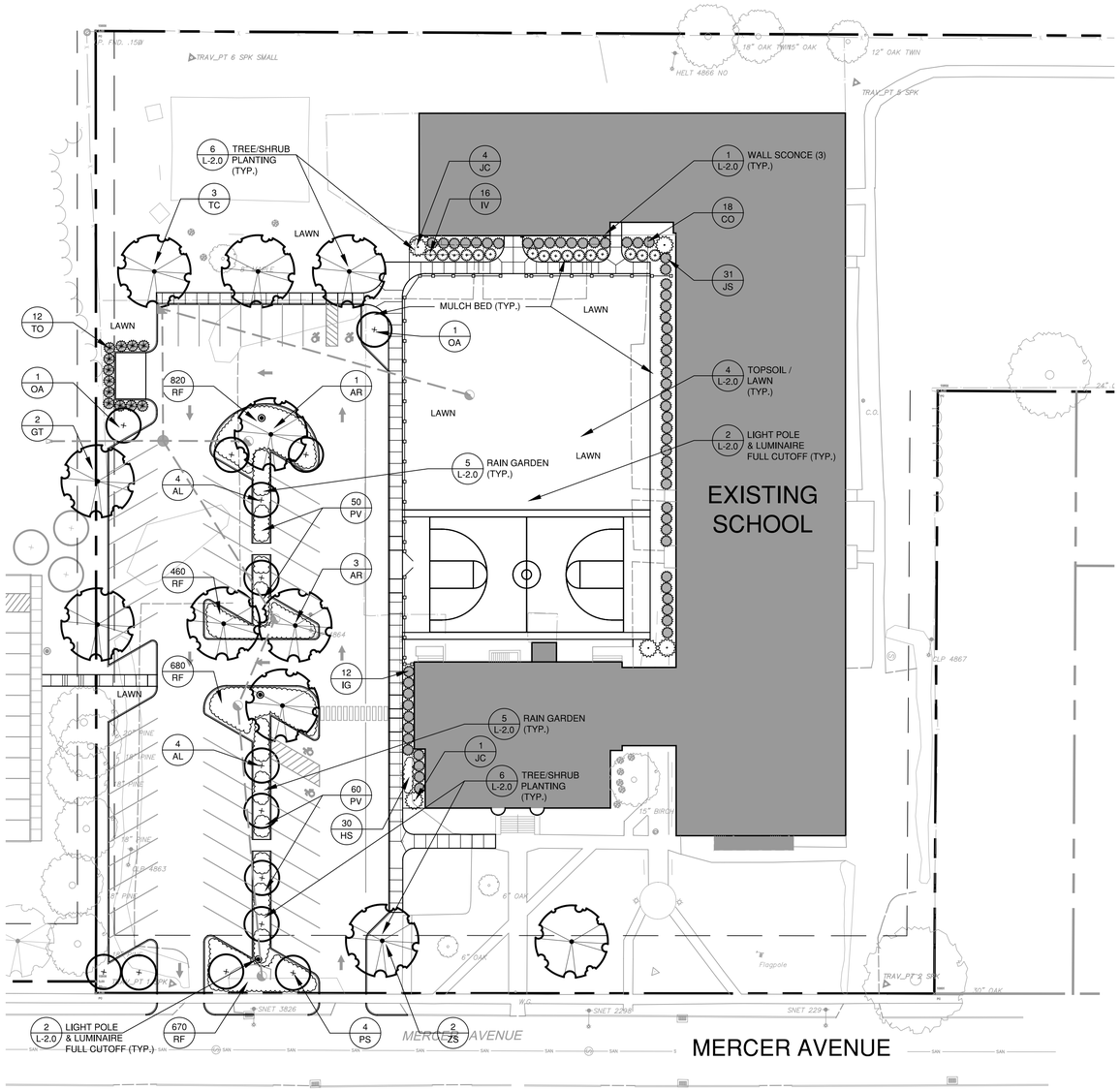

PLANTING NOTES

1. ALL PLANTING MATERIAL TO BE NURSERY GROWN STOCK SUBJECT TO APPLICABLE A.A.N. STANDARDS.
2. THE CONTRACTOR SHALL SUPPLY ALL PLANTS IN QUANTITIES SUFFICIENT TO COMPLETE THE WORK SHOWN ON THE DRAWINGS AND LISTED IN THE PLANT LIST. IN THE EVENT OF A DISCREPANCY BETWEEN QUANTITIES SHOWN IN THE PLANT LIST AND THOSE REQUIRED BY THE DRAWINGS, THE LARGER NUMBER SHALL APPLY.
3. ALL PLANTS SHALL BE APPROVED BY THE LANDSCAPE ARCHITECT PRIOR TO INSTALLATION AND SHALL BE LOCATED AT THE GROWING SITE BY THE CONTRACTOR, FOR THE APPROVAL OF THE LANDSCAPE ARCHITECT. ANY INSTALLATIONS WHICH WERE NOT APPROVED BY THE LANDSCAPE ARCHITECT AND WHICH ARE SUBSEQUENTLY REQUESTED TO BE REMOVED, WILL BE DONE AT THE CONTRACTORS EXPENSE.
4. PRECISE LOCATION OF ITEMS NOT DIMENSIONED ON THE PLAN ARE TO BE FIELD STAKED BY THE CONTRACTOR AND SHALL BE SUBJECT TO THE REQUIREMENTS SPECIFIED IN THE PREVIOUS NOTE.
5. ALL SHRUB AND TREE PITS SHALL BE MULCHED TO A DEPTH OF 3" WITH SHREDDED PINE BARK MULCH.
6. THE CONTRACTOR IS RESPONSIBLE FOR ANY DAMAGED VEGETATION AND SHALL REPLACE OR REPAIR ANY DAMAGE, AT HIS OWN EXPENSE.
7. ALL SHRUB AND GROUND COVER PLANTING AREAS SHALL HAVE CONTINUOUS BEDS OF TOPSOIL, 18" DEEP.
8. THE CONTRACTOR IS RESPONSIBLE FOR LOCATING ALL UTILITIES IN THE FIELD. WHERE PLANT MATERIAL MAY INTERFERE WITH UTILITIES, THE CONTRACTOR SHALL NOTIFY THE LANDSCAPE ARCHITECT TO COORDINATE THEIR INSTALLATION.
9. PLANTINGS INSTALLED IN THE DRY SUMMER MONTHS AND/OR LAWN SEEDED OUT OF SPRING OR FALL PERIODS, IF ALLOWED BY OWNER, WILL REQUIRE AGGRESSIVE IRRIGATION PROGRAMS AT THE CONTRACTOR'S EXPENSE, UNLESS OTHERWISE DIRECTED BY THE OWNER.
10. SUBSTITUTIONS PERMITTED ONLY UPON WRITTEN APPROVAL OF THE OWNER'S REPRESENTATIVE.
11. PLANT TAGS TO REMAIN ON ALL PLANT MATERIAL UNTIL FINAL ACCEPTANCE. CONTRACTOR TO THEN REMOVE ALL PLANT TAGS.
12. WHERE A SIZE RANGE IS GIVEN IN THE PLANT SCHEDULE, AT LEAST 50% OF THE PLANTS PROVIDED SHALL BE OF THE LARGER SIZE.
13. CONTRACTOR TO GUARANTEE ALL PLANT MATERIAL FOR ONE YEAR AFTER DATE OF FINAL ACCEPTANCE.
14. CONTRACTOR TO MAINTAIN ALL PLANT MATERIAL UNTIL 60 DAYS AFTER FINAL ACCEPTANCE UNLESS NOTED OTHERWISE IN SPECS.
15. TOPSOIL AND SEED ALL AREAS DISTURBED BY CONSTRUCTION ACTIVITIES AND NOT COVERED BY OTHER SITE IMPROVEMENTS.

LEGEND

EXISTING | PROPOSED

- BUILDING
- PROPERTY LINE
- YARD LINE
- DECIDUOUS TREE
- FLOWERING TREE
- SHRUBS
- PERENNIALS
- LIGHT
- EDGE OF PAVEMENT

SEEDING

FERTILIZE ACCORDING TO SOIL TEST OR AT THE RATE OF 1OOO LBS. PER ACRE WITH 1O-1O-1O FERTILIZER. 40% OF THE NITROGEN TO BE A SLOW RELEASE FORM. LIME TO A PH OF 6.5 AT A RATE OF 1OO LBS. PER 1OOO SF.

HART'S WEAR 'N TEAR MIX (1-860-529-2537)
35% KENTUCKY BLUEGRASS
35% CREEPING RED FESCUE
20% METOLIUS PERENNIAL RYEGRASS
10% DESCHUTES PERENNIAL RYEGRASS

ALL PLANTING BEDS SHALL BE A CONTINUOUS PIT AS FOLLOWS
A. PERENNIALS - 12" DEPTH
B. SHRUBS - 18" DEPTH

ZONING INFORMATION - SILVER LANE SCHOOL, 15 MERCER AVENUE, EAST HARTFORD, CT			
ZONE: R4 (RESIDENTIAL)	REQUIRED	PROPOSED	CONFORMANCE
LANDSCAPE AROUND PARKING (1 DECIDUOUS TREE / 50FT)	390 FT = 8 TREES	6 NEW TREES (PLUS 6 EXISTING TREES)	YES
INTERIOR LANDSCAPE (10 SF / PARKING SPACE)	58 SPACES X 10 SF = 580SF	4650 SF	YES
EACH SEPARATE LANDSCAPE AREA	MIN. 100SF, MIN. DIMENSION 9FT, AND 1 DECIDUOUS TREE	EACH LANDSCAPE AREA IS GREATER THAN 100SF AND CONTAINS MORE THAN 1 DECIDUOUS TREE	YES
LANDSCAPE FRONT YARD (1 SHADE TREE / 50FT LOT FRONTAGE)	363 SF / 50 FT =7.26 TREES	2 SHADE TREES, 4 FLOWERING TREES + 2 EXISTING TREES (1)	YES

NOTE:
1. FLOWERING TREES WERE SELECTED IN LIEU OF SHADE TREES DUE TO THEIR PROXIMITY TO OVERHEAD POWER LINES.

PLANT SCHEDULE

CATEGORY	SYM.	NO.	BOTANICAL NAME	COMMON NAME	SIZE	COND.
DECIDUOUS TREES	AL	8	AMELANCHIER LAEVIS	ALLEGHENY SERVICEBERRY	2-2 1/2" CAL.	B&B, SINGLE STEM
	AR	4	ACER RUBRUM 'RED SUNSET'	RED SUNSET RED MAPLE	3"-3 1/2" CAL.	B&B
	GT	2	GLEDITSIA TRICANTHOS 'SHADEMASTER'	SHADEMASTER HONEYLOCUST	3-3 1/2" CAL.	B&B
	OA	2	OXYDENDRUM ARBOREUM	SOURWOOD	2-2 1/2" CAL.	B&B
	PS	4	PRUNUS SARGENTII 'COLUMNARIS'	COLUMNARIS SARGENT CHERRY	2-2 1/2" CAL.	B&B
	TC	3	TILIA CORDATA 'GREENSPIRE'	GREENSPIRE LINDEN	3"-3 1/2" CAL.	B&B
	ZS	2	ZELKOVA SERRATA 'GREEN VASE'	GREEN VASE ZELKOVA	3-3 1/2" CAL.	B&B
EVERGREEN TREES	JC	5	JUNIPERUS CHINENSES 'BLUE POINT'	BLUE POINT CHINESE JUNIPER	5' - 6' HT.	B&B
	TO	12	THUJA OCCIDENTALIS 'EMERALD'	EMERALD ARBORVITAE	5' - 6' HT.	B&B
SHRUBS	CO	18	CHAMAECYPARIS OBTUSA 'NANA GRACILIS'	JAPANESE FALSECYPRESS	30" - 36" HT.	CONTAINER
	JS	31	JUNIPERUS CHINENSES 'SEA GREEN'	CHINESE JUNIPER	18" - 24"	CONTAINER
	IV	16	ITEA VIRGINICA 'LITTLE HENRY'	LITTLE HENRY SWEETSPIRE	18" - 24"	CONTAINER
PERENNIALS	PV	110	PANICUM VIRGATUM	SWITCHGRASS	2 GAL.	CONTAINER, 3' SPACING
	HS	150	HEMEROCALLIS 'STELLA DE ORO'	STELLA DE ORO DAYLILY	1 GAL.	CONTAINER, 18" SPACING
	RF	2630	RUDBECKIA FULGIDA 'VIETTE'S LITTLE SUZY'	LITTLE SUZY BLACK-EYED SUSAN	1 GAL.	CONTAINER, 12" SPACING

30 0 30 60
1" = 30'

TO DESIGN #6241

benesch
engineers · scientists · planners
Alfred Benesch & Company • www.benesch.com
120 Hebron Avenue • Glastonbury, Connecticut 06033
Phone: (860) 633-8341 • Fax: (860) 633-1068

TO DESIGN LLC
Creating Meaningful Outdoor Spaces
Site Design
Landscape Architecture
Urban Design
114 West Main Street, Suite 202
New Britain, CT 06051
P 860.612.1700
www.todesignllc.com

Prepared For:
East Hartford Public Schools
74 Tolland Street
East Hartford, CT

PARKING LOT IMPROVEMENT PLAN FOR:
SILVER LANE SCHOOL
15 MERCER AVENUE EAST HARTFORD, CT

DATE:	REVISION:

PROJECT NO.: 70445
SCALE: AS NOTED
DATE: 2-8-18
DRAWN BY: MD/MWF
CHECKED BY: PB

PLANTING PLAN

DRAWING NO.:
L-1.0

G:\1Drawing Files\6241 - Silver Lane School CDs\Dwg\6241-SitePlan-School.dwg 2/8/2018 9:20:48 AM MFisher

PHILIPS GARDCO WALL MOUNT, LED WALL SCONCE 101L

1 WALL MOUNT SCONCE
NOT TO SCALE

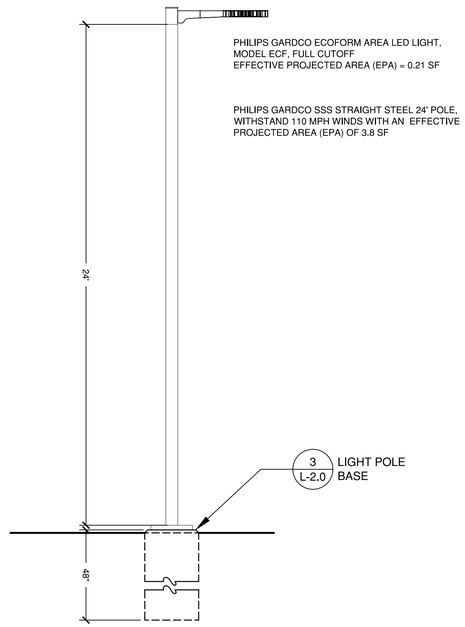

2 LIGHT POLE & LUMINAIRE
SCALE 1/2" = 1'-0"

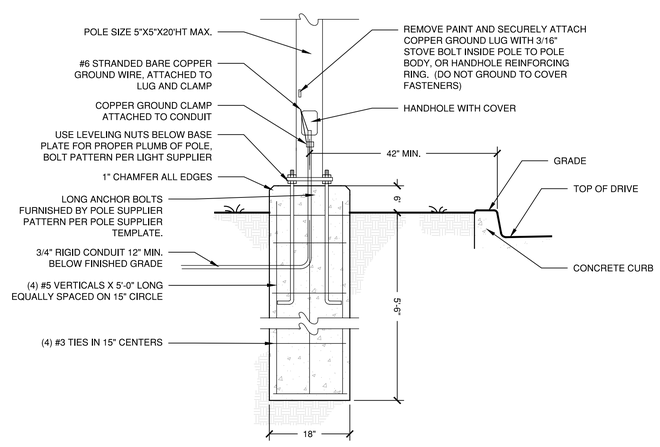

3 LIGHT POLE BASE
SCALE 3/4" = 1'-0"

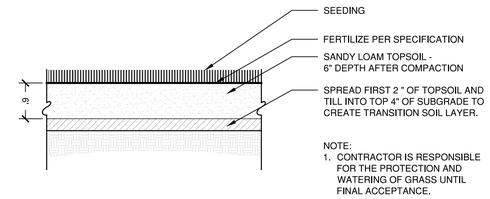

NOTE:
1. CONTRACTOR IS RESPONSIBLE FOR THE PROTECTION AND WATERING OF GRASS UNTIL FINAL ACCEPTANCE.

4 TOPSOIL/LAWN
SCALE 1" = 1'-0"

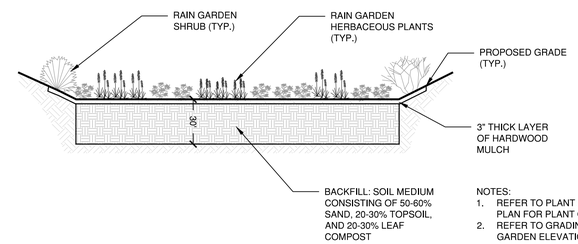

NOTES:
1. REFER TO PLANT SCHEDULE ON PLANTING PLAN FOR PLANT QUANTITIES.
2. REFER TO GRADING PLAN FOR RAIN GARDEN ELEVATIONS.

5 RAIN GARDEN
SCALE 1/4" = 1'-0"

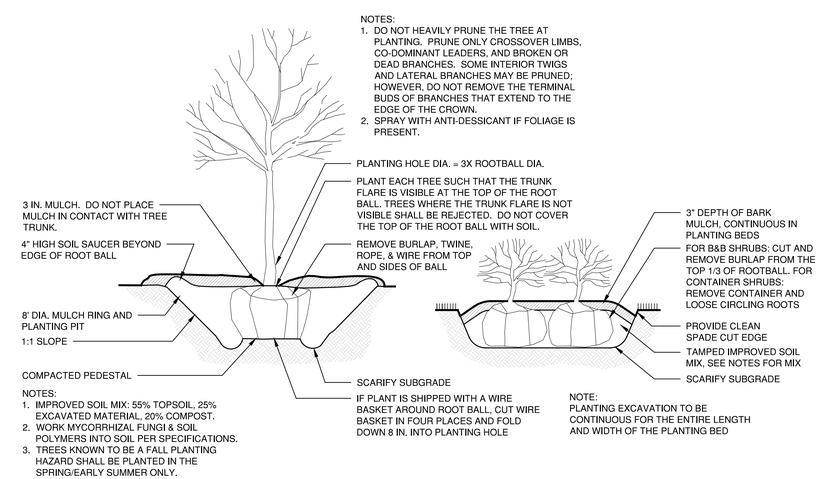

NOTES:
1. DO NOT HEAVILY PRUNE THE TREE AT PLANTING. PRUNE ONLY CROSSOVER LIMBS, CO-DOMINANT LEADERS, AND BROKEN OR DEAD BRANCHES. SOME INTERIOR TWIGS AND LATERAL BRANCHES MAY BE PRUNED; HOWEVER, DO NOT REMOVE THE TERMINAL BUDS OF BRANCHES THAT EXTEND TO THE EDGE OF THE CROWN.
2. SPRAY WITH ANTI-DESSICANT IF FOLIAGE IS PRESENT.

NOTES:
1. IMPROVED SOIL MIX: 55% TOPSOIL, 25% EXCAVATED MATERIAL, 20% COMPOST.
2. WORK MYCORRHIZAL FUNGI & SOIL POLYMERS INTO SOIL PER SPECIFICATIONS.
3. TREES KNOWN TO BE A FALL PLANTING HAZARD SHALL BE PLANTED IN THE SPRING/EARLY SUMMER ONLY.

NOTE:
PLANTING EXCAVATION TO BE CONTINUOUS FOR THE ENTIRE LENGTH AND WIDTH OF THE PLANTING BED

6 TREE / SHRUB PLANTING
SCALE 1" = 1'-0"

TO DESIGN #6241

benesch
engineers · scientists · planners
Alfred Benesch & Company • www.benesch.com
120 Hebron Avenue • Glastonbury, Connecticut 06033
Phone: (860) 633-8341 • Fax: (860) 633-1068

TO DESIGN LLC
Creating Meaningful Outdoor Spaces
Site Design
Landscape Architecture
Urban Design
114 West Main Street, Suite 202
New Britain, CT 06051
P 860.612.1700
www.todesignllc.com

Prepared For:
East Hartford Public Schools
74 Tolland Street
East Hartford, CT

PARKING LOT IMPROVEMENT PLAN FOR:
SILVER LANE SCHOOL
15 MERCER AVENUE EAST HARTFORD, CT

DATE:	REVISION:

PROJECT NO.: 70445
SCALE: AS NOTED
DATE: 2-8-18
DRAWN BY: MD/MWF
CHECKED BY: PB

SITE DETAILS

DRAWING NO.:
L-2.0

G:\1Drawing Files\6241 - Silver Lane School CDs\Dwg\6241-SitePlan-School.dwg 2/8/2018 9:20:52 AM MFisher

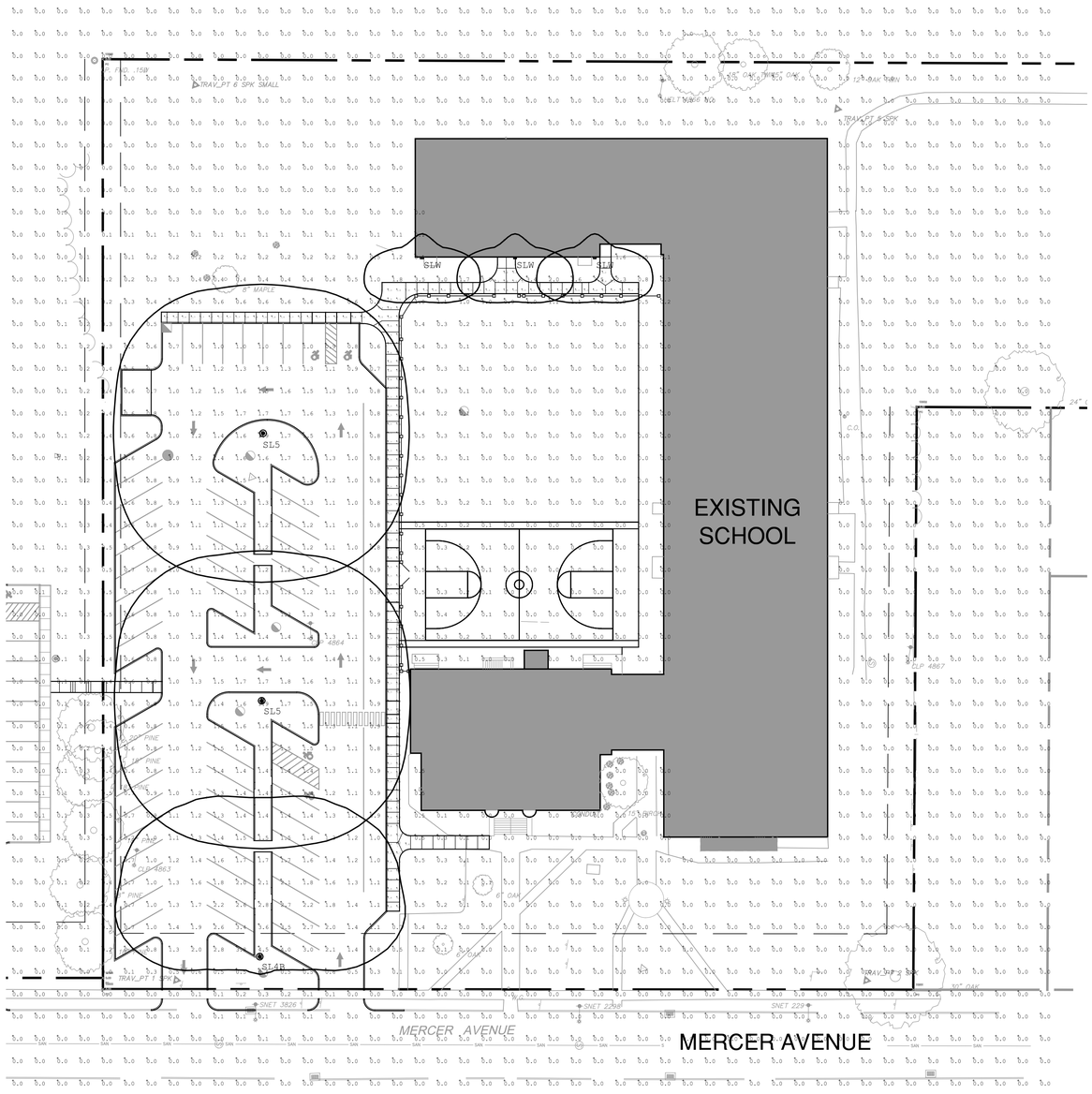

JOB NAME: SILVER LANE ELEMENTARY SCHOOL - SMALL PARKING LOT
APEX LIGHTING SOLUTIONS
REFLECTANCES: N/A
WORKPLANE/CALC PLANE: @ GRADE
POLE HEIGHT: 18FT
APPS: CK
SALES: SP

Luminaire Schedule							
Qty	Label	Arrangement	Lum. Lumens	Lum. Watts	LLF	BUG Rating	Description
1	SL4B	SINGLE	17429	177.8	0.850	B1-U1-G4	GARDCO ECF-S-64L-900-NW-G2-AR-4-x-HIS-x MOUNTED TO SSA5-STB-24M-D1-x
2	SL5	SINGLE	22703	177.8	0.850	B5-U0-G3	GARDCO ECF-S-64L-900-NW-G2-AR-5W-x-x MOUNTED TO SSA5-STB-24M-D1-x
3	SLW	SINGLE	2687	27.8	0.850	B1-U0-G1	GARDCO 101L-16L-530-NW-G1-3-x-x-x WALL MOUNTED @ 8FT AFG TO BOF

Calculation Summary						
Label	Grid Z	Avg	Max	Min	Avg/Min	Max/Min
SITE CALC	0	0.22	4.5	0.0	N.A.	N.A.
WALKWAY	0	0.93	4.5	0.4	2.33	11.25
BASKETBALL COURT		0.08	0.4	0.0	N.A.	N.A.
LARGE PARKING		1.21	4.0	0.4	3.03	10.00

30 0 30 60
1" = 30'

TO DESIGN #6241

benesch
engineers · scientists · planners
Alfred Benesch & Company • www.benesch.com
120 Hebron Avenue • Glastonbury, Connecticut 06033
Phone: (860) 633-8341 • Fax: (860) 633-1068

TO DESIGN LLC
Creating Meaningful Outdoor Spaces
Site Design
Landscape Architecture
Urban Design
114 West Main Street, Suite 202
New Britain, CT 06051
P 860.612.1700
www.todesignllc.com

Prepared For:
East Hartford Public Schools
74 Tolland Street
East Hartford, CT

PARKING LOT IMPROVEMENT PLAN FOR:
SILVER LANE SCHOOL
15 MERCER AVENUE EAST HARTFORD, CT

DATE:	REVISION:

PROJECT NO.: 70445
SCALE: AS NOTED
DATE: 2-8-18
DRAWN BY: MD/MWF
CHECKED BY: PB

PHOTOMETRIC PLAN

DRAWING NO.:
L-3.0

G:\1Drawing Files\6241 - Silver Lane School CDs\Dwg\6241-SitePlan-School.dwg 2/8/2018 9:20:57 AM MFisher