KIA OF EAST HARTFORD

SITE MODIFICATION PLANS

99 ASH STREET, EAST HARTFORD, CONNECTICUT

MAP 5, LOT 13

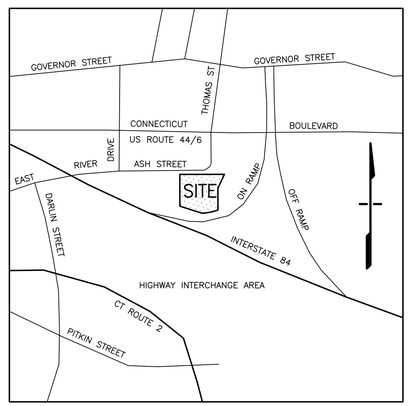

KEY MAP

NOT TO SCALE

LIST OF DRAWINGS

SHEET	DESCRIPTION
1	COVER SHEET
2	EXISTING CONDITIONS PLAN
3	PROPERTY/BOUNDARY SURVEY
4	SITE LAYOUT PLAN
5	GRADING AND UTILITIES WITH EROSION CONTROL PLAN
6	VEHICLE TURNING DIAGRAMS
7	SITE DETAILS
8	ARCHITECTURAL FIRST FLOOR PLAN (A1)
9	ARCHITECTURAL SECOND FLOOR PLAN (A2)
10	ARCHITECTURAL EXTERIOR ELEVATIONS (A3)

APPLICANT

ASH STREET HOLDINGS LLC
687 ASH SWAMP ROAD
GLASTONBURY, CT 06033

OWNER

ASH REALTY ASSOCIATES, LLC
1659 CODY AVENUE
RIDGEWOOD, NY 11385

ARCHITECT

DESIGN TWO ARCHITECTURE
188 LOVERS LANE
GUILFORD, CT 06437
(203) 458-3956

TOWN OF EAST HARTFORD
PLANNING AND ZONING COMMISSION
SITE PLAN CERTIFICATE OF APPROVAL

APPROVAL DATE:_____

EXPIRATION DATE:_____

_____ CHAIRMAN

ENGINEERS/SURVEYORS

Meehan & Goodin Engineers – Surveyors, P.C.
387 North Main Street, Manchester, CT 06042
(860) 643-2520 FAX (860) 649-8806
internet: www.meehangoodin.com

Date: November 2, 2017

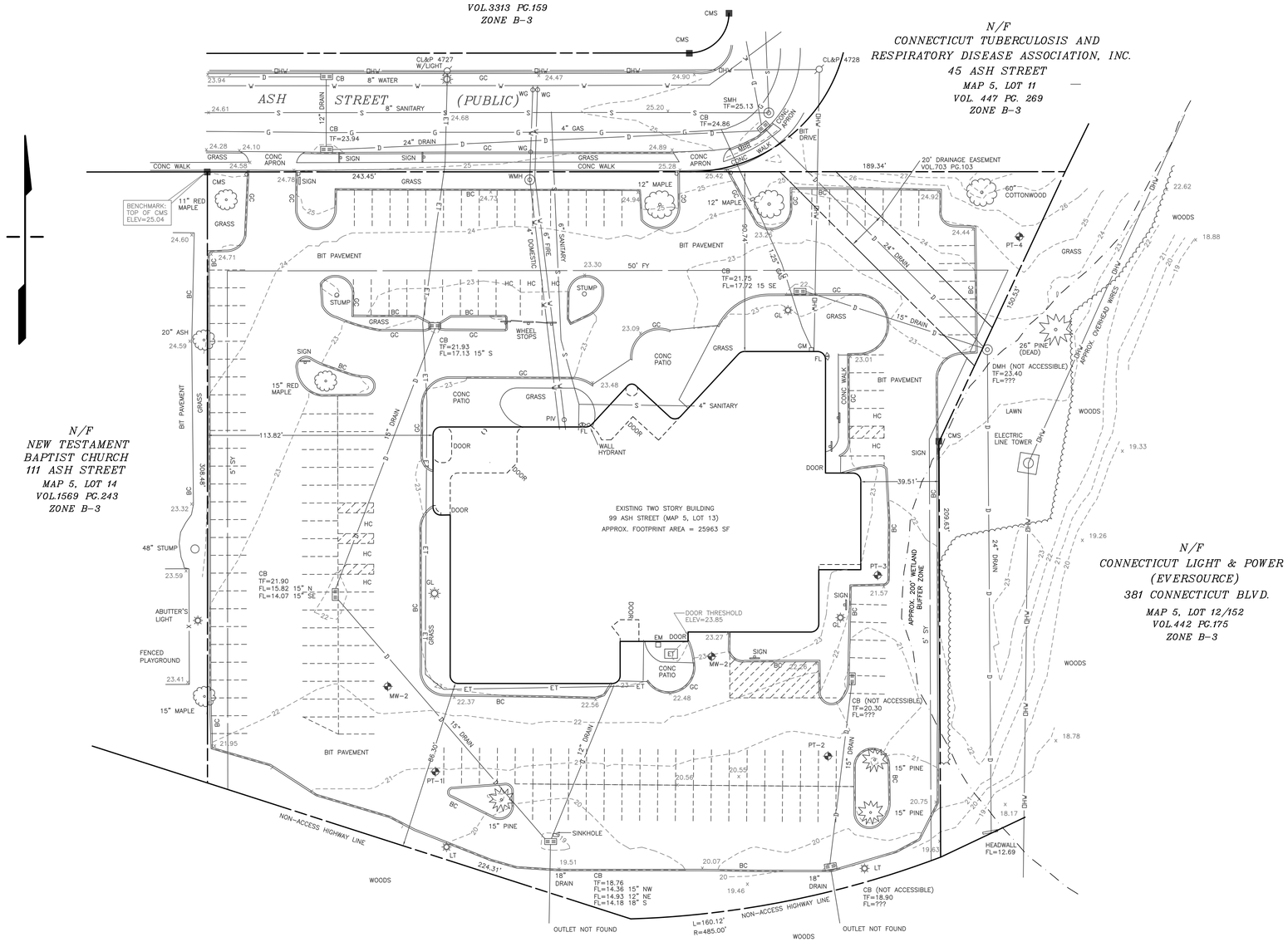

ZONING TABLE

ZONE: B-3	REQUIRED	EXISTING
LOT AREA	40000 SF (1)	134590 SF
MIN. FRONTAGE	200 FT (1)	243.45 FT
MIN. FRONT YARD	50 FT (2)	90.74 FT
MIN. SIDE YARD	5 FT	39.51 FT
OTHER SIDE YARD	10 FT	113.82 FT
MIN. REAR YARD	N/A	86.30 FT
MAX. BLDG. HEIGHT	50 FT	27± FT
MAX. BLDG. COVERAGE	75%	19.3%
MAX. IMPV. COVERAGE	85%	82.0%

* DENOTES NON-CONFORMING TO CURRENT ZONING REGULATIONS
(1) NEW AUTOMOBILE SALES – SECTION 403.1.13
(2) FRONT YARD PER SECTION 212 (50 FT MAXIMUM)

PARKING TABLE

EXISTING PARKING:

REGULAR SPACES ..... 151 SPACES
HANDICAPPED SPACES ..... 8 SPACES
TOTAL EXISTING PARKING ..... 159 SPACES

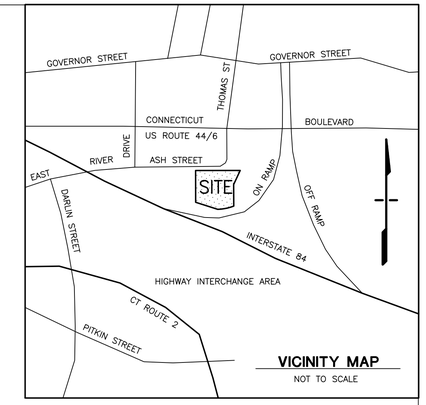

VICINITY MAP
NOT TO SCALE

GENERAL NOTES:

CALL BEFORE YOU DIG – DIAL 811 (1-800-922-4455): EXISTING UTILITIES HAVE BEEN PLOTTED FROM AVAILABLE SOURCES. THE LOCATIONS ARE ONLY APPROXIMATE AND THERE MAY BE ADDITIONAL UTILITIES WITHIN THE PROJECT AREA. THE CONTRACTOR SHALL VERIFY THE LOCATIONS OF ALL EXISTING UTILITIES WITHIN THE WORK AREA, NOTIFY EACH AFFECTED UTILITY COMPANY AND DIG TEST PITS AS REQUIRED PRIOR TO COMMENCING CONSTRUCTION. MEEHAN & GOODIN MAKES NO STATEMENT AS TO THE CONDITION OR SUITABILITY OF ANY UTILITIES FOR ANY INTENDED USE.

THIS PARCEL IS NOT WITHIN A NATURAL DIVERSITY DATA BASE AREA AS SHOWN ON THE DEEP NDDB MAP FOR EAST HARTFORD, CT, JUNE, 2017.

THERE ARE NO AQUIFER PROTECTION AREA ACCORDING TO THE INFORMATION ON THE DEEP AQUIFER PROTECTION AREAS MAP WEBSITE AS OF OCTOBER 2017.

THE ENTIRE PARCEL IS LISTED AS SOIL TYPE "307 URBAN LAND" ON THE NATIONAL COOPERATIVE SOIL SURVEY MAPPING FOR CONNECTICUT.

WETLAND BUFFER SHOWN BASED ON TOWN OF EAST HARTFORD INLAND WETLANDS AND WATERCOURSES MAP SHEET 15 OF 34, DATED 4-29-05.

GENERAL NOTES:

1. ALL MONUMENTATION DEPICTED HEREON WAS FOUND IN THE FIELD UNLESS OTHERWISE NOTED.
2. BASIS OF BEARINGS: MAP REFERENCE NO.1.
3. VERTICAL INFORMATION BASED ON N.G.V.D.88 DATUM

MAP REFERENCES:

REFERENCE IS MADE TO THE FOLLOWING MAPS OR SURVEYS FROM WHICH DATA WAS USED IN THE PREPARATION OF THIS SURVEY AND MAP:

1. "SOUTH MEADOWS URBAN RENEWAL AREA TOWN OF EAST HARTFORD, CONNECTICUT SUBDIVISION PLAT SCALE: 1"=100' DATE: NOV.6, 1964 REVISED THRU 4-73 SHEET 1 OF 2" BY JAMES P. PURCELL ASSOCIATES
2. "PROPERTY/ BOUNDARY SURVEY FOR ASH REALTY ASSOCIATES LLC PROPERTY KNOWN AS ASSESSOR'S LOT #13 SUBDIVISION TRACT #9B-1 & 9B-2 99 ASH STREET EAST HARTFORD, CONNECTICUT SCALE 1"=40' DATE FEBRUARY 15, 2008 REV. FEB.26, 2008 SHEET 1 OF 1" BY MBA ENGINEERING, INC.
3. "SITE PLAN NORTH CENTRAL CONN./H.M.O. SCALE: 1"=20' DATE: 3-31-79 PROJECT NO. 77-690 SHEET P-1" BY THE DEWOLFF PARTNERSHIP ARCHITECTS

NOTES AND DECLARATIONS:

THIS SURVEY AND MAP HAS BEEN PREPARED IN ACCORDANCE WITH THE REGULATIONS OF CONNECTICUT STATE AGENCIES, SECTIONS 20-300B-1 THRU 20-300B-20, THE MINIMUM STANDARDS FOR SURVEYS AND MAPS IN THE STATE OF CONNECTICUT ENDORSED BY THE CONNECTICUT ASSOCIATION OF LAND SURVEYORS, INC. THE TYPE OF SURVEY IS PROPERTY/BOUNDARY, THE BOUNDARY DETERMINATION CATEGORY IS RESURVEY, AND THE HORIZONTAL ACCURACY CONFORMS TO A-2, AND THE VERTICAL ACCURACY CONFORMS TO T-2.

NO DECLARATION IS EXPRESSED OR IMPLIED BY THIS MAP OR COPIES THEREOF UNLESS IT BEARS THE IMPRESSION TYPE SEAL AND ORIGINAL LIVE SIGNATURE OF THE SURVEYOR WHOSE NAME AND REGISTRATION NUMBER APPEAR BELOW. ANY CHANGES MADE TO THIS PLAN WITHOUT THE KNOWLEDGE OF THE SIGNERS INVALIDATES THESE DECLARATIONS.

I HEREBY DECLARE THAT TO THE BEST OF MY KNOWLEDGE, INFORMATION AND BELIEF:

> THE PREMISES DEPICTED HEREON IS LOCATED WITHIN "ZONE X" (AREAS PROTECTED BY LEVEES FROM 1% ANNUAL CHANCE FLOODPLAIN) AS SHOWN ON FEMA FLOOD INSURANCE RATE MAP NUMBER 09003C0369G, EFFECTIVE DATE SEPTEMBER 16, 2011:

> TO MY KNOWLEDGE AND BELIEF, THIS MAP IS SUBSTANTIALLY CORRECT AS NOTED HEREON.

RICHARD MEEHAN, L.L.S. 12330

LEGEND

	PROPERTY LINE	TF	TOP OF FRAME
	EASEMENT LINE	FL	FLOW LINE
S	SANITARY SEWER		UTILITY POLE
OHW	OVERHEAD WIRES	EM/GM	ELECTRIC METER/GAS METER
D	STORM DRAINAGE	WG	WATER GATE
W	WATER SERVICE	PIV	POST INDICATOR VALVE
G	GAS SERVICE	ET	ELECTRIC TRANSFORMER
ET	ELECTRIC/TELEPHONE	FY/SY/RY	FRONT/SIDE/REAR YARDS
56	EXISTING CONTOUR	PT-1	PERMEABILITY TEST LOCATION
x 56.25	EXISTING SPOT GRADE	MW-1	TEMPORARY MONITORING WELL LOCATION
BC/GC	BIT CURB/GRANITE CURB	MBR	METAL BEAM GUIDERAIL
CB	CATCHBASIN		EDGE OF WOODS
DMH	DRAINAGE MANHOLE	IP	IRON PIN
SMH	SANITARY MANHOLE	CMS	CONCRETE MERESTONE
WMH	WATER MANHOLE	HC	HANDICAPPED PARKING SPACE
LT	LIGHT POLE		
GL	GROUND LIGHT		
FL	FLOOD LIGHT		

0' 30' 60' 90'
SCALE: 1" = 30'

TOWN OF EAST HARTFORD
PLANNING AND ZONING COMMISSION
SITE PLAN CERTIFICATE OF APPROVAL
APPROVAL DATE:_____
EXPIRATION DATE:_____
_____ CHAIRMAN

REVISION	DATE

SEAL & SIGNATURE:

NOTE:
THIS DRAWING IS AN INSTRUMENT OF SERVICE OF AND REMAINS THE PROPERTY OF MEEHAN & GOODIN. IT IS TO BE USED ONLY FOR THIS SPECIFIC PROJECT AND SHALL NOT BE MODIFIED WITHOUT THE WRITTEN CONSENT OF MEEHAN & GOODIN. ANY UNAUTHORIZED MODIFICATIONS WILL INVALIDATE ALL SIGNATURES, CERTIFICATIONS AND DECLARATIONS CONTAINED HEREON.

Meehan & Goodin
Engineers – Surveyors, P.C.
387 North Main Street, Manchester, CT 06042
(860) 643-2520 FAX (860) 649-8806

PLAN PREPARED FOR
KIA OF EAST HARTFORD
99 ASH STREET EAST HARTFORD, CONN.

EXISTING CONDITIONS PLAN

SCALE: 1" = 30'	DESIGN: OT	PROJECT: 17113	ACAD: 17113-ECP.DWG
DATE: 11-2-2017	DRAFT: ERJ	Q://SC13/WORK	SHEET NO. 2 OF 10

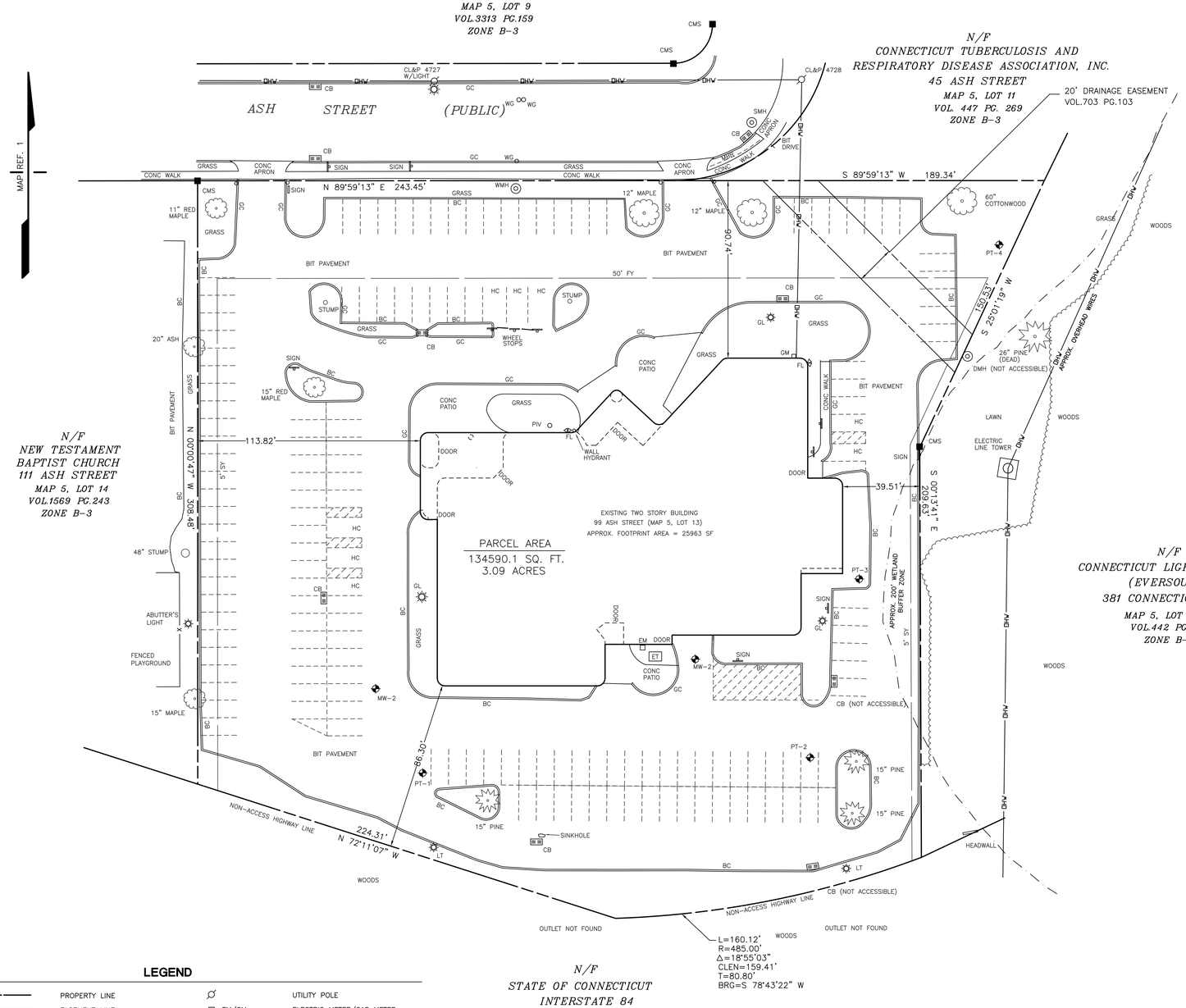

ZONING TABLE

ZONE: B-3	REQUIRED	EXISTING
LOT AREA	40000 SF (1)	134590 SF
MIN. FRONTAGE	200 FT (1)	243.45 FT
MIN. FRONT YARD	50 FT (2)	90.74 FT
MIN. SIDE YARD	5 FT	39.51 FT
OTHER SIDE YARD	10 FT	113.82 FT
MIN. REAR YARD	N/A	86.30 FT
MAX. BLDG. HEIGHT	50 FT	27± FT
MAX. BLDG. COVERAGE	75%	19.3%
MAX. IMPV. COVERAGE	85%	82.0%

* DENOTES NON-CONFORMING TO CURRENT ZONING REGULATIONS
(1) NEW AUTOMOBILE SALES – SECTION 403.1.13
(2) FRONT YARD PER SECTION 212 (50 FT MAXIMUM)

PARKING TABLE

EXISTING PARKING:

REGULAR SPACES	151 SPACES
HANDICAPPED SPACES	8 SPACES
TOTAL EXISTING PARKING	159 SPACES

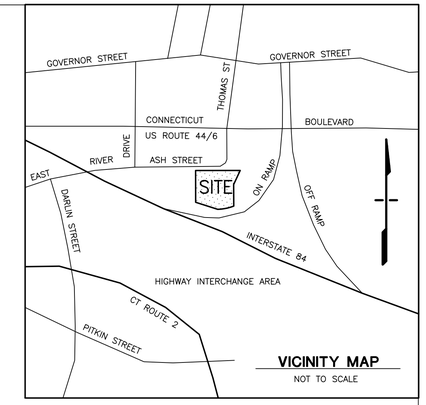

VICINITY MAP
NOT TO SCALE

GENERAL NOTES:

1. ALL MONUMENTATION DEPICTED HEREON WAS FOUND IN THE FIELD UNLESS OTHERWISE NOTED.
2. BASIS OF BEARINGS: MAP REFERENCE NO.1.
3. VERTICAL INFORMATION BASED ON N.G.V.D.88 DATUM
4. CALL BEFORE YOU DIG – DIAL 811 (1-800-922-4455): EXISTING UTILITIES HAVE BEEN PLOTTED FROM AVAILABLE SOURCES. THE LOCATIONS ARE ONLY APPROXIMATE AND THERE MAY BE ADDITIONAL UTILITIES WITHIN THE PROJECT AREA. THE CONTRACTOR SHALL VERIFY THE LOCATIONS OF ALL EXISTING UTILITIES WITHIN THE WORK AREA, NOTIFY EACH AFFECTED UTILITY COMPANY AND DIG TEST PITS AS REQUIRED PRIOR TO COMMENCING CONSTRUCTION. MEEHAN & GOODIN MAKES NO STATEMENT AS TO THE CONDITION OR SUITABILITY OF ANY UTILITIES FOR ANY INTENDED USE.
5. WETLAND BUFFER SHOWN BASED ON TOWN OF EAST HARTFORD INLAND WETLANDS AND WATERCOURSES MAP SHEET 15 OF 34, DATED 4-29-05.

MAP REFERENCES:

REFERENCE IS MADE TO THE FOLLOWING MAPS OR SURVEYS FROM WHICH DATA WAS USED IN THE PREPARATION OF THIS SURVEY AND MAP:

1. "SOUTH MEADOWS URBAN RENEWAL AREA TOWN OF EAST HARTFORD, CONNECTICUT SUBDIVISION PLAT SCALE: 1"=100' DATE: NOV.6, 1964 REVISED THRU 4-73 SHEET 1 OF 2" BY JAMES P. PURCELL ASSOCIATES
2. "PROPERTY/ BOUNDARY SURVEY FOR ASH REALTY ASSOCIATES LLC PROPERTY KNOWN AS ASSESSOR'S LOT #13 SUBDIVISION TRACT #9B-1 & 9B-2 99 ASH STREET EAST HARTFORD, CONNECTICUT SCALE 1"=40' DATE FEBRUARY 15, 2008 REV. FEB.26, 2008 SHEET 1 OF 1" BY MBA ENGINEERING, INC.
3. "SITE PLAN NORTH CENTRAL CONN./H.M.O. SCALE: 1"=20' DATE: 3-31-79 PROJECT NO. 77-690 SHEET P-1" BY THE DEWOLFF PARTNERSHIP ARCHITECTS

NOTES AND DECLARATIONS:

THIS SURVEY AND MAP HAS BEEN PREPARED IN ACCORDANCE WITH THE REGULATIONS OF CONNECTICUT STATE AGENCIES, SECTIONS 20-300B-1 THRU 20-300B-20, THE MINIMUM STANDARDS FOR SURVEYS AND MAPS IN THE STATE OF CONNECTICUT ENDORSED BY THE CONNECTICUT ASSOCIATION OF LAND SURVEYORS, INC. THE TYPE OF SURVEY IS PROPERTY/BOUNDARY, THE BOUNDARY DETERMINATION CATEGORY IS RESURVEY, AND THE HORIZONTAL ACCURACY CONFORMS TO A-2.

NO DECLARATION IS EXPRESSED OR IMPLIED BY THIS MAP OR COPIES THEREOF UNLESS IT BEARS THE IMPRESSION TYPE SEAL AND ORIGINAL LIVE SIGNATURE OF THE SURVEYOR WHOSE NAME AND REGISTRATION NUMBER APPEAR BELOW. ANY CHANGES MADE TO THIS PLAN WITHOUT THE KNOWLEDGE OF THE SIGNERS INVALIDATES THESE DECLARATIONS.

I HEREBY DECLARE THAT TO THE BEST OF MY KNOWLEDGE, INFORMATION AND BELIEF:

> THE PREMISES DEPICTED HEREON IS LOCATED WITHIN "ZONE X" (AREAS PROTECTED BY LEVEES FROM 1% ANNUAL CHANCE FLOODPLAIN) AS SHOWN ON FEMA FLOOD INSURANCE RATE MAP NUMBER 09003C0369G, EFFECTIVE DATE SEPTEMBER 16, 2011:

> TO MY KNOWLEDGE AND BELIEF, THIS MAP IS SUBSTANTIALLY CORRECT AS NOTED HEREON.

_____
RICHARD MEEHAN, L.L.S. 12330

LEGEND

	PROPERTY LINE		UTILITY POLE
	EASEMENT LINE	EM/GM	ELECTRIC METER/GAS METER
BC/GC	BIT CURB/GRANITE CURB	WG	WATER GATE
CB	CATCHBASIN	PIV	POST INDICATOR VALVE
DMH	DRAINAGE MANHOLE	ET	ELECTRIC TRANSFORMER
SMH	SANITARY MANHOLE	FY/SY/RY	FRONT/SIDE/REAR YARDS
WMH	WATER MANHOLE	PT-1	PERMEABILITY TEST LOCATION
LT	LIGHT POLE	MW-1	TEMPORARY MONITORING WELL LOCATION
GL	GROUND LIGHT	MBR	METAL BEAM GUIDERAIL
FL	FLOOD LIGHT		EDGE OF WOODS
HC	HANDICAPPED PARKING SPACE	IP	IRON PIN
		CMS	CONCRETE MERESTONE

0' 30' 60' 90'
SCALE: 1" = 30'

TOWN OF EAST HARTFORD
PLANNING AND ZONING COMMISSION
SITE PLAN CERTIFICATE OF APPROVAL
APPROVAL DATE:_____
EXPIRATION DATE:_____
_____ CHAIRMAN

REVISION	DATE

SEAL & SIGNATURE:

NOTE:
THIS DRAWING IS AN INSTRUMENT OF SERVICE OF AND REMAINS THE PROPERTY OF MEEHAN & GOODIN. IT IS TO BE USED ONLY FOR THIS SPECIFIC PROJECT AND SHALL NOT BE MODIFIED WITHOUT THE WRITTEN CONSENT OF MEEHAN & GOODIN. ANY UNAUTHORIZED MODIFICATIONS WILL INVALIDATE ALL SIGNATURES, CERTIFICATIONS AND DECLARATIONS CONTAINED HEREON.

Meehan & Goodin
Engineers – Surveyors, P.C.
387 North Main Street, Manchester, CT 06042
(860) 643-2520 FAX (860) 649-8806

PLAN PREPARED FOR
KIA OF EAST HARTFORD
99 ASH STREET EAST HARTFORD, CONN.

PROPERTY/BOUNDARY SURVEY

SCALE: 1" = 30'	DESIGN: RM	PROJECT: 17113	ACAD: 17113-PBS.DWG
DATE: 11-2-2017	DRAFT: SLH	Q://SC13/WORK	SHEET NO. 3 OF 10

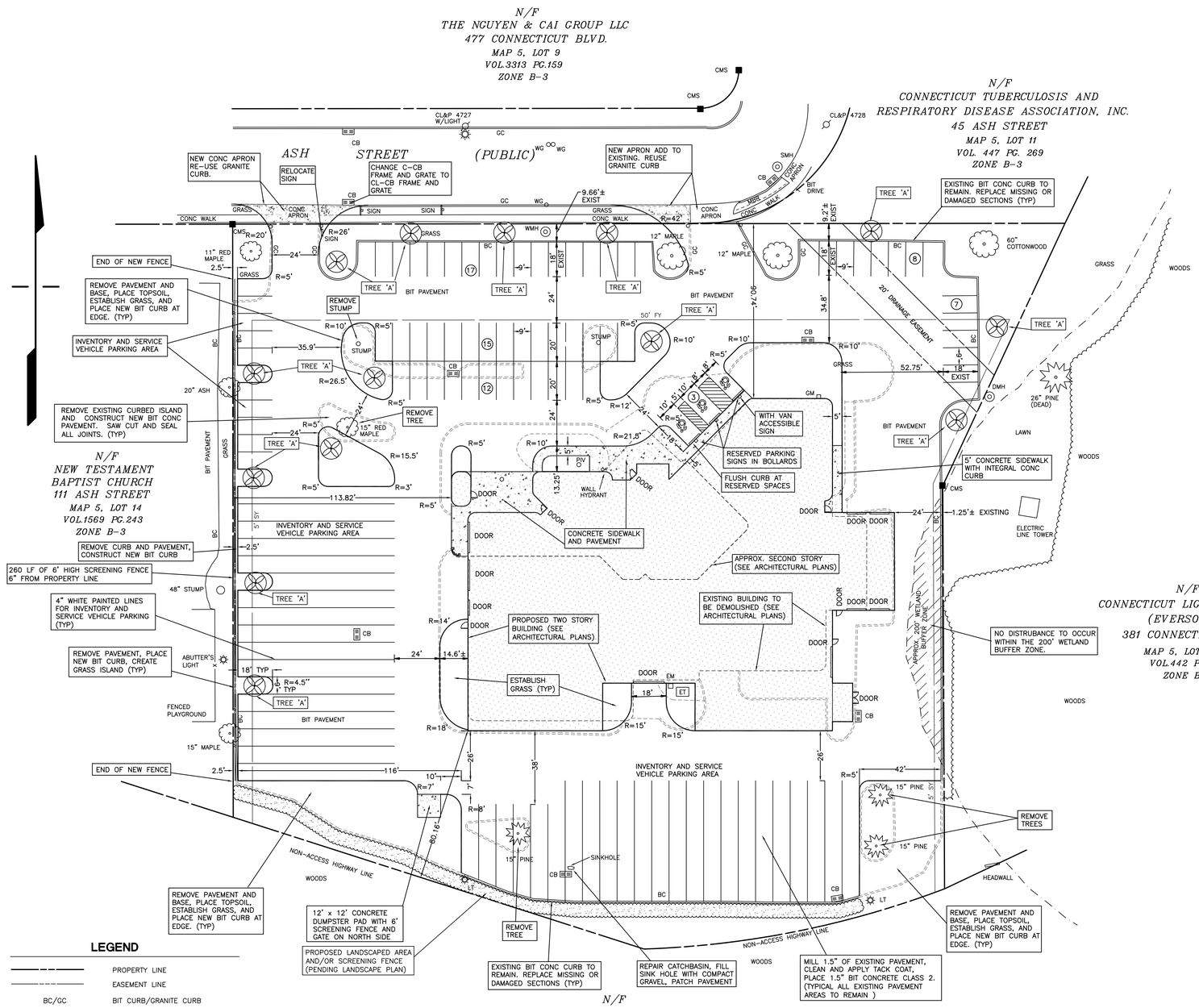

LEGEND

	PROPERTY LINE
	EASEMENT LINE
BC/GC	BIT CURB/GRANITE CURB
CB	CATCHBASIN
DMH	DRAINAGE MANHOLE
SMH	SANITARY MANHOLE
WMH	WATER MANHOLE
LT	LIGHT POLE
GL	GROUND LIGHT
FL	FLOOD LIGHT
	UTILITY POLE
EM/GM	ELECTRIC METER/GAS METER
WG	WATER GATE
PIV	POST INDICATOR VALVE
ET	ELECTRIC TRANSFORMER
FY/SY/RY	FRONT/SIDE/REAR YARDS
MBR	METAL BEAM GUIDERAIL
	EDGE OF WOODS
IP	IRON PIN
CMS	CONCRETE MERESTONE
HC	RESERVED PARKING SPACE
(14)	NUMBER OF SPACES IN THE ROW

ZONING TABLE

ZONE: B-3	REQUIRED	PROPOSED
LOT AREA	40000 SF (1)	134590 SF
MIN. FRONTAGE	200 FT (1)	243.45 FT
MIN. FRONT YARD	50 FT (2)	90.74 FT
MIN. SIDE YARD	5 FT	25.25 FT
OTHER SIDE YARD	10 FT	113.82 FT
MIN. REAR YARD	N/A	80.16 FT
MAX. BLDG. HEIGHT	50 FT	27'± FT
MAX. BLDG. COVERAGE	75%	21.6%
MAX. IMPV. COVERAGE	85%	81.3%

* DENOTES NON-CONFORMING TO CURRENT ZONING REGULATIONS

(1) NEW AUTOMOBILE SALES – SECTION 403.1.13

(2) FRONT YARD PER SECTION 212 (50 FT MAXIMUM)

PARKING CALCULATIONS

REQUIRED PARKING:

167 INVETORY CARS @ 1 SPACE/5 ..... 34 SPACES

PROPOSED PARKING (CUSTOMER/DISPLAY):

REGULAR SPACES ..... 59 SPACES

RESERVED SPACES ..... 3 SPACES

TOTAL PROPOSED PARKING ..... 62 SPACES

GENERAL NOTES:

PROFESSIONAL ENGINEER'S SEAL/SIGNATURE: ORIGINAL DOCUMENT CONTAINS THE LIVE SEAL AND LIVE SIGNATURE OF THE PROFESSIONAL ENGINEER. THIS DOCUMENT SHALL BE CONSIDERED UNSEALED AND UNSIGNED BY THE PROFESSIONAL ENGINEER IF SUCH SEAL AND SIGNATURE ARE MISSING OR IF IT CONTAINS A SEAL AND/OR SIGNATURE THAT ARE COPIES.

CALL BEFORE YOU DIG – DIAL 811 (1-800-922-4455): EXISTING UTILITIES HAVE BEEN PLOTTED FROM AVAILABLE SOURCES. THE LOCATIONS ARE ONLY APPROXIMATE AND THERE MAY BE ADDITIONAL UTILITIES WITHIN THE PROJECT AREA. THE CONTRACTOR SHALL VERIFY THE LOCATIONS OF ALL EXISTING UTILITIES WITHIN THE WORK AREA, NOTIFY EACH AFFECTED UTILITY COMPANY AND DIG TEST PITS AS REQUIRED PRIOR TO COMMENCING CONSTRUCTION. MEEHAN & GOODIN MAKES NO STATEMENT AS TO THE CONDITION OR SUITABILITY OF ANY UTILITIES FOR ANY INTENDED USE.

WETLAND BUFFER SHOWN BASED ON TOWN OF EAST HARTFORD INLAND WETLANDS AND WATERCOURSES MAP SHEET 15 OF 34, DATED 4-29-05.

ALL PROPRIETARY PRODUCTS AND MATERIALS SHALL BE INSTALLED AND MAINTAINED IN ACCORDANCE WITH THE MANUFACTURERS RECOMMENDATIONS.

ON ALL DISTURBED AREAS THAT WILL NOT BE COVERED BY BUILDING, PAVEMENT, OR OTHERWISE PERMANENTLY STABILIZED, PLACE TOPSOIL (6 INCH MINIMUM) AND ESTABLISH GRASS TURF UPON COMPLETION OF CONSTRUCTION.

THE CONTRACTOR SHALL ADJUST FINAL GRADES TO MEET FIELD CONDITIONS AND ALL AREAS SHALL BE GRADED TO DRAIN.

ANY IMPROVEMENTS SHOWN ON THIS PLAN OR REQUIRED RELATING TO PROPOSED WORK WITHIN THE TOWN OF EAST HARTFORD STREET LINES SHALL BE CARRIED OUT IN ACCORDANCE WITH THE STANDARDS AND REQUIREMENTS FOR WORK WITHIN THEIR STREET LINES.

ANY WORK WITHIN THE STATE OF CONNECTICUT PARCEL (INTERSTATE 84) RIGHT-OF-WAY) WILL REQUIRE REVIEW BY AND A PERMIT FROM THE CONNECTICUT DEPARTMENT OF TRANSPORTATION. THE CONTRACTOR SHALL BE RESPONSIBLE FOR APPLYING FOR THIS PERMIT PRIOR TO CONSTRUCTION. ALL WORK WITHIN THE STATE HIGHWAY LINES SHALL CONFORM TO THE STATE OF CONNECTICUT DEPARTMENT OF TRANSPORTATION "STANDARD SPECIFICATIONS FOR ROADS, BRIDGES AND INCIDENTAL CONSTRUCTION" FORM 816.

REFER TO THE ARCHITECTURAL DRAWINGS FOR ADDITIONAL INFORMATION, LAYOUT AND GRADES OF VARIOUS ITEMS.

ALL NEW TRANSITIONS FROM PAVEMENT AREAS TO FINISHED FLOORS WITHIN THE BUILDING SHALL BE FLUSH AT THE DOORS UNLESS SPECIFICALLY SHOWN OTHERWISE ON THE ARCHITECTURAL DRAWINGS.

THE DEVELOPER SHALL NOTIFY THE TOWN OF EAST HARTFORD ENGINEERING DIVISION 24 HOURS PRIOR TO BEGINNING ANY STORM DRAINAGE, ROADWAY PREPARATION, PAVING, SIDEWALK, CURBING, STREET LINE MONUMENTATION, PROPERTY CORNER PINS, ETC... TO SCHEDULE INSPECTIONS. THE DIVISION CAN BE REACHED BETWEEN 8:30 AM – 4:30 PM AT 860-291-7380.

LANDSCAPING DATA

OWNER MAY SUBSTITUTE EQUIVALENT PLANTS (SIZE AND STYLE)

SYMBOL	LABEL	COMMON NAME	LATIN NAME	SIZE	QTY.
⊗	A	CLEVELAND SELECT PEAR	PYRUS CALLERYANA 'CLEVELAND SELECT'	3" CAL	15

0' 30' 60' 90'

SCALE: 1" = 30'

TOWN OF EAST HARTFORD
PLANNING AND ZONING COMMISSION
SITE PLAN CERTIFICATE OF APPROVAL

APPROVAL DATE:_____

EXPIRATION DATE:_____

_____ CHAIRMAN

REVISION	DATE

SEAL & SIGNATURE:

NOTE:

THIS DRAWING IS AN INSTRUMENT OF SERVICE OF AND REMAINS THE PROPERTY OF MEEHAN & GOODIN. IT IS TO BE USED ONLY FOR THIS SPECIFIC PROJECT AND SHALL NOT BE MODIFIED WITHOUT THE WRITTEN CONSENT OF MEEHAN & GOODIN. ANY UNAUTHORIZED MODIFICATIONS WILL INVALIDATE ALL SIGNATURES, CERTIFICATIONS AND DECLARATIONS CONTAINED HEREON.

Meehan & Goodin
Engineers – Surveyors, P.C.
387 North Main Street, Manchester, CT 06042
(860) 643-2520 FAX (860) 649-8806

PLAN PREPARED FOR

KIA OF EAST HARTFORD

99 ASH STREET EAST HARTFORD, CONN.

SITE LAYOUT PLAN

SCALE: 1" = 30'	DESIGN: OT	PROJECT: 17113	ACAD: 17113-SLP.DWG
DATE: 11-2-2017	DRAFT: ERJ	Q://SC13/WORK	SHEET NO. 4 OF 10

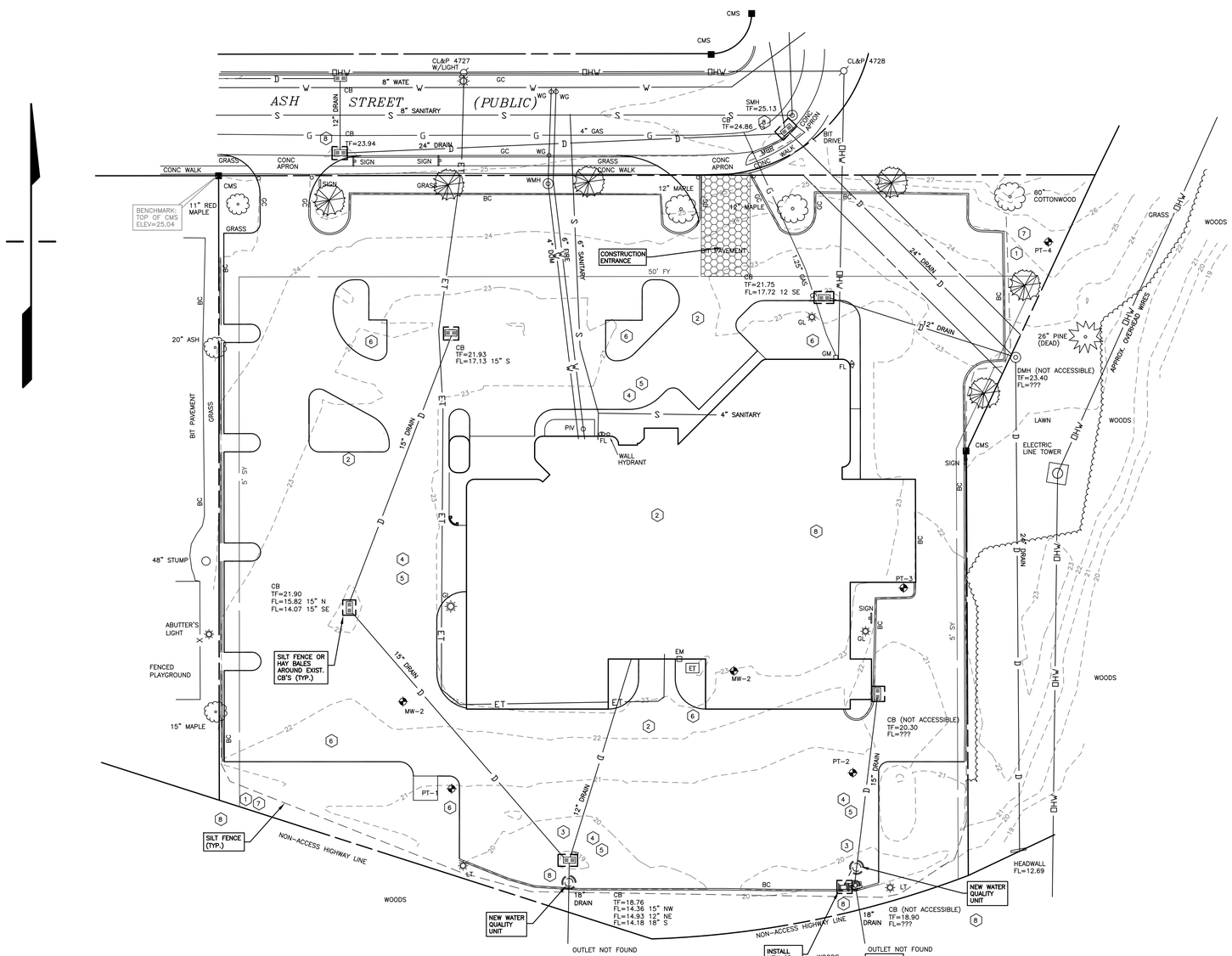

22. INSTALLATION OF ALL CONTROL MEASURES TO BE DONE IN ACCORDANCE WITH THE "2002 CONNECTICUT GUIDELINES FOR SOIL EROSION AND SEDIMENT CONTROL", AS AMENDED. ADDITIONAL CONTROL MEASURES MAY HAVE TO BE ADDED TO THE SITE CONSTRUCTION AREAS WHERE SURFACE EROSION OR SEDIMENT CONTROL IS A PROBLEM. THE ABOVE REFERENCE MANUAL SHALL BE USED AS THE BASIS FOR THESE ADDITIONAL CONTROL MEASURES.

H. SEQUENCE OF SITE DEVELOPMENT AND INSTALLATION OF CONTROL MEASURES:

1. INSTALL SILT FENCE AND EROSION PROTECTION AROUND THE LIMITS OF CONSTRUCTION.
2. BUILDING AND PARKING CONSTRUCTION TO BEGIN.
3. INSTALL STORM SYSTEM AND OTHER UTILITIES. PROTECT INSTALLED CB WITH SILT FENCE AND HAY BALES.
4. INSTALL FINAL GRADING, CURBING AND PAVEMENT. SILTATION CHECKS TO BE REINSTALLED AFTER PAVEMENT IS INSTALLED.
5. FINAL GRADING OF SLOPES TO BE COMPLETED, INCLUDING PLACING AND FINAL GRADING OF TOPSOIL AND SEEDING.
6. INSTALL FINAL LANDSCAPING AND LAWN AREAS AS REQUIRED BY OWNER.
7. SEDIMENTATION CONTROL MEASURES TO BE REMOVED AFTER VEGETATION IS FULLY ESTABLISHED ON SLOPES AND OTHER POTENTIAL AREAS OF EROSION HAVE BEEN CONTROLLED.
8. ROADWAYS, SIDEWALKS AND ABUTTING ROADS TO BE CLEARED OF SILT AND DIRT AND DIRT DUE TO CONSTRUCTION. CATCH BASINS AND STORM DRAINS TO BE CLEANED OF ANY ACCUMULATED SILT. DOWNSTREAM CULVERTS AND/OR WATERCOURSES TO BE INSPECTED, AND CLEANED, OF ANY DEPOSITED SILT DUE TO CONSTRUCTION.

WATER POLLUTION CONTROL PLAN

A. SITE DESCRIPTION

1. NATURE OF THE CONSTRUCTION ACTIVITY

THE SITE IS BEING REDEVELOPED INTO A BUILDING AND PARKING.

2. SEQUENCE OF MAJOR SOIL DISTURBANCE ACTIVITIES

ACTIVITY	CONSTRUCTION SCHEDULE 2017–2018				
	DEC.	JAN.	FEB.	MAR.	APR.	MAY
INSTALL INITIAL EROSION CONTROL MEASURES	X	X				
CLEARING AND GRUBBING	X	X				
EXCAVATE AND INSTALL NEW BUILDING AND PARKING	X	X	X	X		
INSTALL STORM SYSTEM		X	X	X		
SITE GRADING			X	X	X	
SITE PAVING				X	X	X
TOPSOIL AND FINAL GRADING				X	X	X
STABILIZE EMBANKMENTS				X	X	X
LANDSCAPING					X	X	X
CLEAN UP					X	X	X

3. SITE AREA

THE AREA OF THE CONSTRUCTION IS APPROXIMATELY 2.75 ACRES.
THE SITE WILL BE DISTURBED AS THE PARKING IS DEVELOPED.

4. RUNOFF COEFFICIENT

THE AVERAGE RUNOFF COEFFICIENT OF THE SITE AFTER CONSTRUCTION IS APPROX. 0.60.

5. SITE MAP

THE SITE PLAN INCLUDED HEREIN PROVIDES ALL INFORMATION ON SLOPES AND GRADING REQUIRED.

6. RECEIVING WATERS

THE RUNOFF FROM THE SITE WILL BE DISCHARGED TO THE EXISTING STORM SYSTEM.

B. CONTROLS

1. EROSION AND SEDIMENT CONTROLS ARE SHOWN ON THIS PLAN.
2. STRUCTURAL PRACTICES
THE PROPOSED STORM SYSTEM IS DESIGNED AS A MAIN SYSTEM OF MANHOLE TO MANHOLE WITH THE CATCH BASINS GOING TO MANHOLES ONLY. THE CATCH BASINS ARE EQUIPPED WITH TRAPS TO ALLOW THE HEAVY SOILS AND SILT TO FALL OUT, FLOATABLES TO BE TRAPPED AND OILS TO REMAIN IN THE CATCH BASINS.
3. MAINTENANCE PROGRAM DURING CONSTRUCTION
ALL CATCH BASINS SHALL BE CLEANED AND CLEARED OF DEBRIS, SAND OR SILT ON A BIWEEKLY BASIS. DEBRIS SHALL BE REMOVED FROM THE SITE ALONG WITH OTHER CONSTRUCTION DEBRIS. SILT AND SAND MAY BE SPREAD IN FLAT OR LEVEL AREAS LATER TO BE TOP SOILED OR GRADED.
SILT FENCE OR HAY BALE PROTECTION SHALL BE REPAIRED AS NEEDED AND NOTED ABOVE. ACCUMULATED SILT SHALL BE REMOVED OR SPREAD PER THE EROSION CONTROL PLAN ELSEWHERE ON THIS SHEET.
4. DEWATERING WASTE WATERS
ANY DEWATERING ON SITE SHALL BE TO A CONTROLLED FLAT AREA OR AN EXCAVATED SUMP AREA ENCIRCLED WITH HAY BALES OR SILTFENCE. NO WATER SHALL BE ALLOWED TO ENTER THE STORM SYSTEM WITHOUT BEING DETAINED TO LET SILT DROP OUT.
5. POST CONSTRUCTION STORM WATER MANAGEMENT
A. CATCH BASIN SUMPS WILL BE CLEANED ON A SIX MONTH BASIS. REMOVED MATERIAL WILL BE TAKEN OFF SITE. OILS WILL BE SKIMMED OFF THE WATER SURFACE ON A SIX MONTH BASIS OR AS A PROBLEM MAY DICTATE. PROPER REMOVAL OF OILS WILL BE CONDUCTED AS REQUIRED.
6. OTHER CONTROLS
ALL CONSTRUCTION DEBRIS WILL BE REMOVED FROM THE SITE AS SOON AS POSSIBLE. NO DEBRIS WILL BE ALLOWED TO ENTER THE STORM SYSTEM. THE CONTRACTORS WILL REMOVE ANY DEBRIS ACCIDENTALLY OR OTHERWSE DEPOSITED IN THE STORM STRUCTURES.
WATER POLLUTION PREVENTION AND EROSION CONTROL MEASURES SHALL BE CHECKED FOR DAMAGE DISREPAIR OR REPLACEMENT BY AN INSPECTOR AT A MINIMUM INTERVAL OF ONCE A WEEK UNTIL THE SITE IS STABILIZED. AFTER THE SITE IS STABILIZED, INSPECTIONS SHALL BE CONDUCTED ONCE A MONTH FOR THREE MONTHS.

C. CONTRACTORS

ALL CONTRACTORS AND SUBCONTRACTORS WORKING ON THIS PROJECT WHICH MAY REASONABLY BE EXPECTED TO CAUSE OR HAVE THE POTENTIAL TO CAUSE POLLUTION OF THE WATERS OF THE STATE, SHALL SIGN THE FOLLOWING CERTIFICATION:

"I CERTIFY UNDER PENALTY OF THE LAW THAT I HAVE READ AND UNDERSTAND THE TERMS AND CONDITIONS OF THE GENERAL PERMIT FOR THE DISCHARGE OF STORMWATER ASSOCIATED WITH CONSTRUCTION ACTIVITY. I UNDERSTAND THAT AS A CONTRACTOR OR SUBCONTRACTOR AT THE SITE, I AM COVERED BY THIS GENERAL PERMIT, AND MUST COMPLY WITH THE GENERAL CONDITIONS OF THIS PERMIT, INCLUDING BUT NOT LIMITED TO THE REQUIREMENTS OF THE STORMWATER POLLUTION CONTROL PLAN PREPARED FOR THIS SITE."

GENERAL UTILITY NOTES

1. ALL SITE DEMOLITION/CONSTRUCTION SHALL BE IN ACCORDANCE WITH THE TOWN OF EAST HARTFORD, PUBLIC WORKS DEPARTMENT, ENGINEERING DEPARTMENT AND THE PUBLIC IMPROVEMENT STANDARDS.

2. THE UNDERGROUND UTILITIES SHOWN ON THIS PLAN HAVE BEEN OBTAINED FROM AVAILABLE RECORDS AND HAVE BEEN LOCATED IN THE FIELD WHERE POSSIBLE. THE ACTUAL LOCATION OF THESE UTILITIES SHOULD BE VERIFIED BY THE CONTRACTOR. THE CONTRACTOR MUST CONTACT "CALL BEFORE YOU DIG" 1–800–922–4455 FOR LOCATION AND MARKING OF ALL EXISTING UTILITIES PRIOR TO ANY EXCAVATION.

3. SANITARY AND STORM SERVICE SHALL MEET THE REQUIREMENTS OF THE TOWN OF EAST HARTFORD.

4. ELECTRICAL, TELEPHONE, CABLE, AND COMMUNICATIONS SERVICE SHALL MEET THE REQUIREMENTS OF THE INDIVIDUAL UTILITY COMPANY.

5. ALL DAMAGE TO PUBLIC FACILITIES WITHIN THE STREET RIGHT OF WAY DURING SITE CONSTRUCTION SHALL BE REPAIRED BY THE APPLICANT.

6. ACCESS TO THE SITE SHALL DURING CONSTRUCTION SHALL BE THROUGH THE CONSTRUCTION ENTRANCES AS SHOWN ON THE PLAN AND NO OTHER ACCESS SHALL BE ALLOWED.

7. PIPE LENGTHS SHOWN ARE FROM CENTER TO CENTER OF STRUCTURES. CONTRACTOR IS TO CUT PIPES FLUSH WITH STRUCTURE WALLS.

NOTE:

CONTRACTOR IS RESPONSIBLE FOR REMOVING SEDIMENT THAT ACCUMULATES IN THE DOWNSTREAM OFF–SITE DRAINAGE SYSTEMS AS A RESULT OF THE PROJECT. SEE SEDIMENT AND EROSION CONTROL PLAN NOTES SECTION H, SEQUENCE #8.

SEDIMENTATION AND EROSION CONTROL PLAN

A. INTENT: IT IS THE INTENT OF THIS SEDIMENTATION AND EROSION CONTROL PLAN TO PROVIDE THE SITE CONTRACTOR THE MEANS TO CONTROL EROSION AND SEDIMENTS INTO EXISTING WATERCOURSES AND DRAINAGE SYSTEMS, AND ON TO SURROUNDING PROPERTIES AND ROADWAYS. THE CONTRACTOR SHALL USE THIS PLAN, ALONG WITH THE GUIDELINES PROVIDED, TO CONTAIN SEDIMENTS WITHIN SPECIFICALLY NOTED AREAS AS LISTED ON THIS PLAN.

B. DESIGN CRITERIA: THE DESIGN CRITERIA USED TO PREPARE THIS PLAN WAS BASED ON THE "2002 CONNECTICUT GUIDELINES FOR SOIL EROSION AND SEDIMENT CONTROL" AS AMENDED. WHILE TAKING INTO CONSIDERATION THE EXISTING NATURE AND TOPOGRAPHY OF THE SITE, AS WELL AS THE SPECIFICS OF THE PROPOSED PROJECT.

C. STARTING DATE OF CONSTRUCTION: DEC., 2017

D. COMPLETION DATE OF CONSTRUCTION: MAR., 2018

(PLEASE NOTE THE ABOVE NOTED DATES SHOULD BE ASSUMED AS TENTATIVE, AND ARE SUBJECT TO CHANGE DUE TO CONDITIONS BEYOND THE CONTROL OF THE DEVELOPER.)

E. AGENT RESPONSIBLE FOR IMPLEMENTATION OF PLAN:
OWNER

F. DISCUSSION OF SITE AND DEVELOPMENT:
THE SITE IS LOCATED AT 99 ASH STREET IN THE TOWN OF EAST HARTFORD, CONNECTICUT.

THE DEVELOPMENT, AS PROPOSED, INVOLVES THE CONSTRUCTION OF A BUILDING AND PARKING.

THE SITE PRESENTLY DRAINS TO THE SOUTH.
THE PROPOSED DRAINAGE SYSTEM WILL INTO THE EXISTING DRAINAGE SYSTEM.

THE FOLLOWINGS ARE DEEMED POTENTIAL AREAS REQUIRING PROPER SEDIMENTATION AND EROSION CONTROL MEASURES.
a. LOWER SLOPE OF EXCAVATION AREAS
b. BOTTOM OF SLOPE WITH EXCAVATION AREAS
c. STORM SEWERS, INCLUDING EXISTING AND PROPOSED CATCH BASINS.
d. DUST AND MUD CONTROL ON SURROUNDING STREETS AND PROPERTIES.

THIS PLAN DEALS WITH THESE POTENTIAL SOURCES OF SEDIMENTS BY PROPOSING SILTATION FENCES AND CHECKS, AND REQUIRING PROMPT STABILIZATION OF EXPOSED SLOPES.

20. ORGANIC MULCH ANCHORING WITH STRAW OR HAY MULCH MUST BE ANCHORED IMMEDIATELY AFTER SPREADING TO PREVENT WIND BLOWING. THE FOLLOWING METHODS AND/OR PROCEDURES SHOULD BE USED IN ACCORDANCE WITH THE MANUFACTURERS RECOMMENDATIONS AND THE STATE OF CONNECTICUT SEDIMENTATION AND EROSION CONTROL GUIDELINES.....
A) MULCH ANCHORING TOOL
B) TRACKING
C) LIQUID MULCH BINDERS
D) MULCH NETTING
E) PEG AND TWINE
F) CHEMICAL MULCHES
G) MATS

G. SEDIMENTATION & EROSION CONTROL NOTES:

1. ALL EMBANKMENT SLOPES, DISTURBED OR RE–GRADED DURING CONSTRUCTION SHALL BE SODDED OR SEEDED AND MULCHED (AS REQUIRED), AS SOON AS PRACTICAL AFTER COMPLETION OF SLOPES.

2. SYNTHETIC FILTER FABRIC BARRIERS OR HAY BALES SHALL BE PLACED AS SHOWN ON THIS PLAN TO CONTROL SEDIMENTATION AND EROSION. REFER TO DETAIL FOR PROPER INSTALLATION REQUIREMENTS.

3. ALL PERIMETER SYNTHETIC FILTER CHECKS OR BARRIERS SHALL BE PLACED PRIOR TO STARTING OF ANY SITE CONSTRUCTION.

4. PRIOR TO CONSTRUCTION, ALL AREAS TO BE DISTURBED IN A PARTICULAR LOCATION SHALL BE STRIPPED OF TOPSOIL AND STOCKPILED IN AN APPROPRIATE LOCATION. HAY BALES OR SYNTHETIC FILTER BARRIERS SHALL BE PLACED AROUND THE PERIMETER OF THE PILE. TOPSOIL SHALL BE IMMEDIATELY SEEDED WITH A TEMPORARY COVER OF ANNUAL RYE GRASS.

5. HAY BALES OR SYNTHETIC FILTER BARRIERS SHALL BE PLACED AT ENDS OF ALL SWALES, EITHER PERMANENT OR TEMPORARY, IMMEDIATELY AFTER SWALE HAS

6. HAY BALES CHECKS SHALL BE PLACED AROUND CATCH BASINS AFTER COMPLETION TO PREVENT SILTATION OF SUMPS. REFER TO DETAIL FOR PROPER INSTALLATION REQUIREMENTS.

7. AREAS SHALL BE SODDED OR SEEDED IMMEDIATELY AFTER FINAL GRADING BETWEEN APRIL 1 AND JUNE 15, AND BETWEEN AUGUST 15 AND SEPTEMBER 30.

8. WHEN GRADING IS NOT COMPLETED BY SEPTEMBER 30, OR AREAS TO BE EXPOSED FOR EXTENDED PERIODS OF TIME, A TEMPORARY COVER OF ANNUAL RYE GRASS SEEDED AT THE RATE OF 1.5 POUNDS PER 1000 SQUARE FEET SHALL BE ESTABLISHED OR HAY SPREAD.

9. THE TOWN ENGINEER, OR HIS AGENT, SHALL BE NOTIFIED BEFORE CONSTRUCTION BEGINS AND UPON COMPLETION.

10. ALL CONTROL MEASURES SHALL BE INSPECTED WEEKLY FOR EXCESSIVE ACCUMULATIONS OF SILT. THESE INSPECTIONS SHALL BE INCREASED TO DAILY DURING PERIODS OF RAIN OR WHEN EXCESSIVE EROSION WITHIN A PARTICULAR PORTION OF SITE IS OCCURRING WITH REGULARITY.

11. CONTROL MEASURES SHALL BE CLEANED OF SILT WHEN DEPTH ACCUMULATIONS REACH 1/2 THE OVERALL HEIGHT.

12. ALL CONTROL MEASURES ARE TO BE REMOVED FROM SITE IMMEDIATELY AFTER WORK HAS BEEN COMPLETED AND GROUND COVER HAS BEEN ESTABLISHED. PERIODIC REVIEW OF THE SITE MAY BE REQUIRED TO INSPECT THE SITE TO INSURE THAT GRADED EMBANKMENTS MAINTAIN VEGETATION AS ESTABLISHED. IN THE EVENT THAT GROUND COVER HAS NOT BEEN FULLY ESTABLISHED IN A PARTICULAR AREA, ADDITIONAL MEASURES MAY NEED TO BE TAKEN TO REESTABLISH THE GROUND COVER.

13. EXISTING STORM SEWERS, WATERCOURSES, AND CATCH BASINS SHALL BE CLEANED OF ANY ACCUMULATION OF SILT DUE TO CONSTRUCTION.

14. CONTRACTOR TO KEEP ROADWAY FREE AND CLEAR OF ANY ACCUMULATED MUD OR SILT DURING CONSTRUCTION. MEASURES TO BE USED MAY INCLUDE EITHER SWEEPING, APPLICATION OF WATER SPRAYS OR MULCHING TECHNIQUES.

15. DISTURBED AREAS SHALL BE SEEDED WITH THE FOLLOWING SEEDING MIXTURE: KENTUCKY BLUEGRASS 45%, CREEPING RED FUSCUE 45% AND PERENNIAL RYE GRASS 10%. SEED TO BE APPLIED AT A RATE OF 4 LBS./1000 S.F. PLANTING SEASONS ARE FROM APRIL 1 TO JUNE 1 AND FROM AUGUST 15 TO SEPTEMBER 15.

16. MULCHING SHALL BE REQUIRED IN ADDITION TO SEEDING AFTER SEPTEMBER 30th.

17. SEED BED PREPARATION:
A) APPLY FERTILIZER AT THE RATE OF 300 POUNDS PER ACRE OF 7.5 LBS./1000 S.F. OR 10–10–10 OR EQUIVALENT.
B) APPLY LIMESTONE (EQUIVALENT TO 50 PERCENT CALCIUM PLUS MAGNESIUM OXIDE) AT A RATE OF 2 TONS/ACRE OR 135 LBS./1000 S.F. AS PER EXISTING SOIL CONDITIONS, FOR SOIL CONDITIONS TEXTURES (CLAY, CLAY LOAM AND HIGH ORGANIC SOIL).

18. AREAS WHICH HAVE BEEN TEMPORARILY OR PERMANENTLY SEEDED SHALL BE MULCHED IMMEDIATELY FOLLOWING SEEDING. MULCH ANCHORING WILL BE USED ON SLOPES GREATER THAN 3 PERCENT AND CONCENTRATED FLOW AREAS SUCH AS DIVERSIONS AND OUTLET WATERWAY CHANNELS.

19. ORGANIC MULCH MAY BE USED IN ANY AREA WHERE MULCH IS REQUIRED. THE USE OF STRAW OR HAY AT THE RATE OF 1.5–2 TONS/ACRE OR 70–90 LBS./1000 S.F. AND BE FREE OF WEEDS AND COURSE MATTER, AND MUST BE ANCHORED AND SPREAD WITH A MULCH BLOWER OR BY HAND.

20. ALL MULCHES MUST BE INSPECTED PERIODICALLY, IN PARTICULAR AFTER RAINSTORMS, TO CHECK FOR FILL EROSION. WHERE EROSION IS OBSERVED, ADDITIONAL MULCH SHOULD BE APPLIED. NET SHOULD BE INSPECTED AFTER RAINSTORMS FOR DISLOCATION OR FAILURE. IF WASHOUTS OR BREAKAGE OCCURS, REINSTALL NET AS NECESSARY AFTER REPAIRING DAMAGE TO THE SLOPE(S). INSPECTIONS SHOULD TAKE PLACE UNTIL GRASSED AREAS ARE FIRMLY ESTABLISHED TO CONTROL SOIL EROSION AND TO SURVIVE SEVERE WEATHER CONDITIONS.

21. WHERE SLOPES HAVE ERODED, AND SUBSEQUENT REPAIR MEASURES HAVE FAILED TO PROVIDE A STABILIZED EMBANKMENT, USE OF EROSION CONTROL BLANKETS SHALL BE REQUIRED. BLANKETS SHALL BE SELECTED AND INSTALLED IN ACCORDANCE WITH MANUFACTURERS RECOMMENDATIONS.

TOWN OF EAST HARTFORD
PLANNING AND ZONING COMMISSION
SITE PLAN CERTIFICATE OF APPROVAL

APPROVAL DATE:_____

EXPIRATION DATE:_____

_____ CHAIRMAN

0′ 30′ 60′ 90′
SCALE: 1" = 30′

REVISION	DATE

SEAL & SIGNATURE:

NOTE:
THIS DRAWING IS AN INSTRUMENT OF SERVICE OF AND REMAINS THE PROPERTY OF MEEHAN & GOODIN. IT IS TO BE USED ONLY FOR THIS SPECIFIC PROJECT AND SHALL NOT BE MODIFIED WITHOUT THE WRITTEN CONSENT OF MEEHAN & GOODIN. ANY UNAUTHORIZED MODIFICATIONS WILL INVALIDATE ALL SIGNATURES, CERTIFICATIONS AND DECLARATIONS CONTAINED HEREON.

Meehan & Goodin
Engineers – Surveyors, P.C.
387 North Main Street, Manchester, CT 06042
(860) 643–2520 FAX (860) 649–8806

PLAN PREPARED FOR
KIA OF EAST HARTFORD
99 ASH STREET EAST HARTFORD, CONN.

GRADING AND UTILITIES WITH EROSION CONTROL PLAN

SCALE: 1" = 30′	DESIGN: OT	PROJECT: 17113	ACAD: 17113.DWG
DATE: 11–2–2017	DRAFT: DT	Q://SC13/WORK	SHEET NO. 5 OF 10

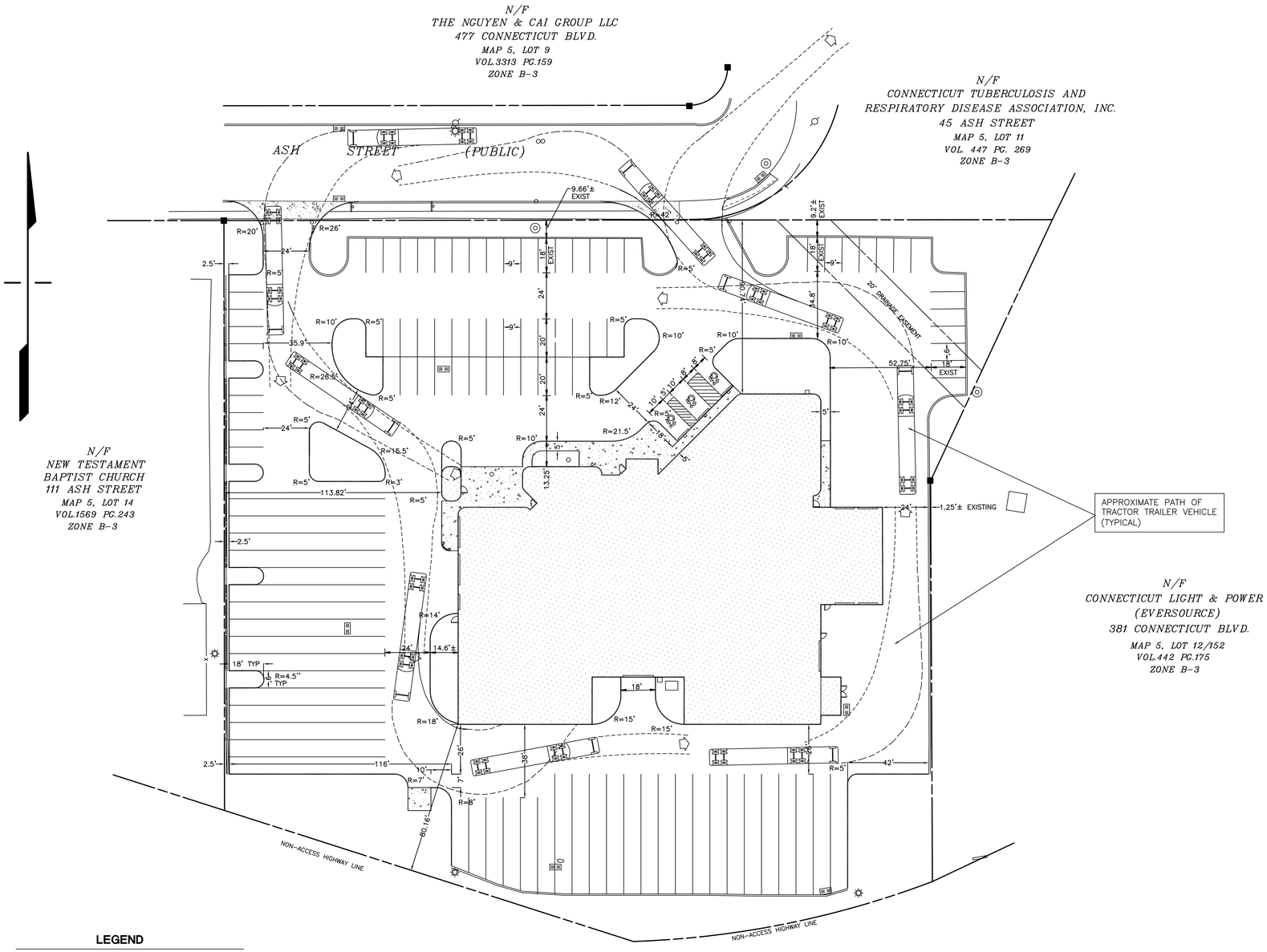

GENERAL NOTES:

PROFESSIONAL ENGINEER'S SEAL/SIGNATURE: ORIGINAL DOCUMENT CONTAINS THE LIVE SEAL AND LIVE SIGNATURE OF THE PROFESSIONAL ENGINEER. THIS DOCUMENT SHALL BE CONSIDERED UNSEALED AND UNSIGNED BY THE PROFESSIONAL ENGINEER IF SUCH SEAL AND SIGNATURE ARE MISSING OR IF IT CONTAINS A SEAL AND/OR SIGNATURE THAT ARE COPIES.

CALL BEFORE YOU DIG – DIAL 811 (1-800-922-4455): EXISTING UTILITIES HAVE BEEN PLOTTED FROM AVAILABLE SOURCES. THE LOCATIONS ARE ONLY APPROXIMATE AND THERE MAY BE ADDITIONAL UTILITIES WITHIN THE PROJECT AREA. THE CONTRACTOR SHALL VERIFY THE LOCATIONS OF ALL EXISTING UTILITIES WITHIN THE WORK AREA, NOTIFY EACH AFFECTED UTILITY COMPANY AND DIG TEST PITS AS REQUIRED PRIOR TO COMMENCING CONSTRUCTION. MEEHAN & GOODIN MAKES NO STATEMENT AS TO THE CONDITION OR SUITABILITY OF ANY UTILITIES FOR ANY INTENDED USE.

THIS DRAWING IS INTENDED TO PRESENT THE VEHICLE TURNING DIAGRAMS AND IS NOT TO BE USED FOR CONSTRUCTION. REFER TO THE OTHER SITE PLANS FOR CONSTRUCTION.

LEGEND

	PROPERTY LINE
	EASEMENT LINE
BC/GC	BIT CURB/GRANITE CURB
CB	CATCHBASIN
DMH	DRAINAGE MANHOLE
SMH	SANITARY MANHOLE
WMH	WATER MANHOLE
LT	LIGHT POLE
GL	GROUND LIGHT
FL	FLOOD LIGHT
	UTILITY POLE
EM/GM	ELECTRIC METER/GAS METER
WG	WATER GATE
PIV	POST INDICATOR VALVE
ET	ELECTRIC TRANSFORMER
FY/SY/RY	FRONT/SIDE/REAR YARDS
MBR	METAL BEAM GUIDERAIL
	EDGE OF WOODS
IP	IRON PIN
CMS	CONCRETE MERESTONE
HC	RESERVED PARKING SPACE
(14)	NUMBER OF SPACES IN THE ROW

0' 30' 60' 90'

SCALE: 1" = 30'

TOWN OF EAST HARTFORD
PLANNING AND ZONING COMMISSION
SITE PLAN CERTIFICATE OF APPROVAL

APPROVAL DATE:_____

EXPIRATION DATE:_____

_____ CHAIRMAN

REVISION	DATE

SEAL & SIGNATURE:

NOTE:

THIS DRAWING IS AN INSTRUMENT OF SERVICE OF AND REMAINS THE PROPERTY OF MEEHAN & GOODIN. IT IS TO BE USED ONLY FOR THIS SPECIFIC PROJECT AND SHALL NOT BE MODIFIED WITHOUT THE WRITTEN CONSENT OF MEEHAN & GOODIN. ANY UNAUTHORIZED MODIFICATIONS WILL INVALIDATE ALL SIGNATURES, CERTIFICATIONS AND DECLARATIONS CONTAINED HEREON.

Meehan & Goodin
Engineers – Surveyors, P.C.
387 North Main Street, Manchester, CT 06042
(860) 643-2520 FAX (860) 649-8806

PLAN PREPARED FOR

KIA OF EAST HARTFORD

99 ASH STREET EAST HARTFORD, CONN.

VEHICLE TURNING DIAGRAMS

SCALE: 1" = 30'	DESIGN: OT	PROJECT: 17113	ACAD: 17113-SLP.DWG
DATE: 11-2-2017	DRAFT: ERJ	Q://SC13/WORK	SHEET NO. 6 OF 10

NOTES:

1. WALLS OF ALL CATCH BASINS OVER 10 FEET DEEP TO BE INCREASED TO 12" THICKNESS. INSIDE DIMENSIONS TO REMAIN THE SAME.

2. PROVIDE 2" DIA. WEEPHOLES IN EACH WALL AT LOWEST INVERT ELEVATION.

3. REVISE DIMENSIONS IF USING DOUBLE GRATE.

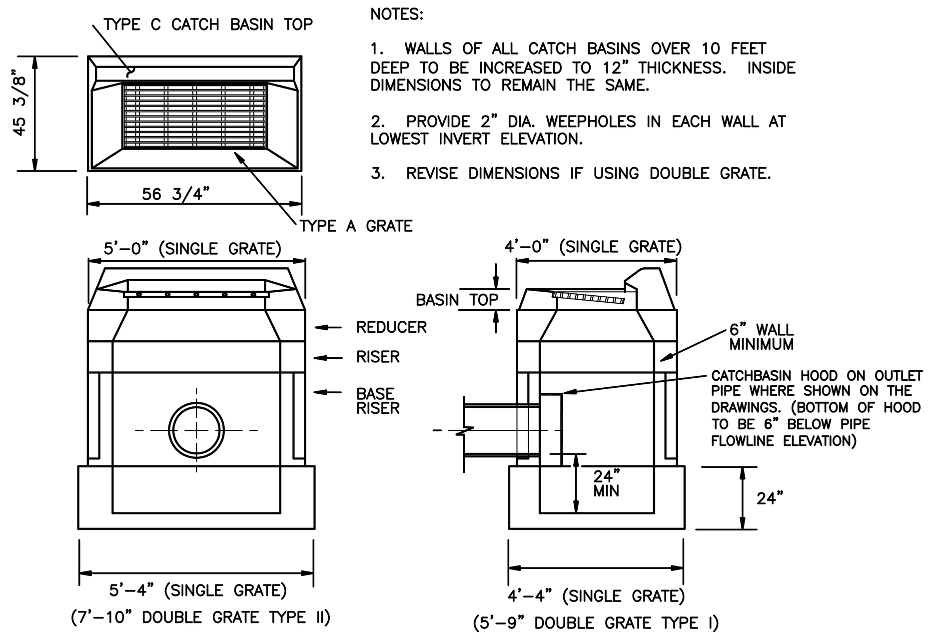

TYPE 'C' CATCH BASIN

NOT TO SCALE

NOTES:

1. WALLS OF ALL CATCH BASINS OVER 10 FEET DEEP TO BE INCREASED TO 12" THICKNESS. INSIDE DIMENSIONS TO REMAIN THE SAME.

2. PROVIDE 2" DIA. WEEPHOLES IN EACH WALL AT LOWEST INVERT ELEVATION.

3. REVISE DIMENSIONS IF USING DOUBLE GRATE.

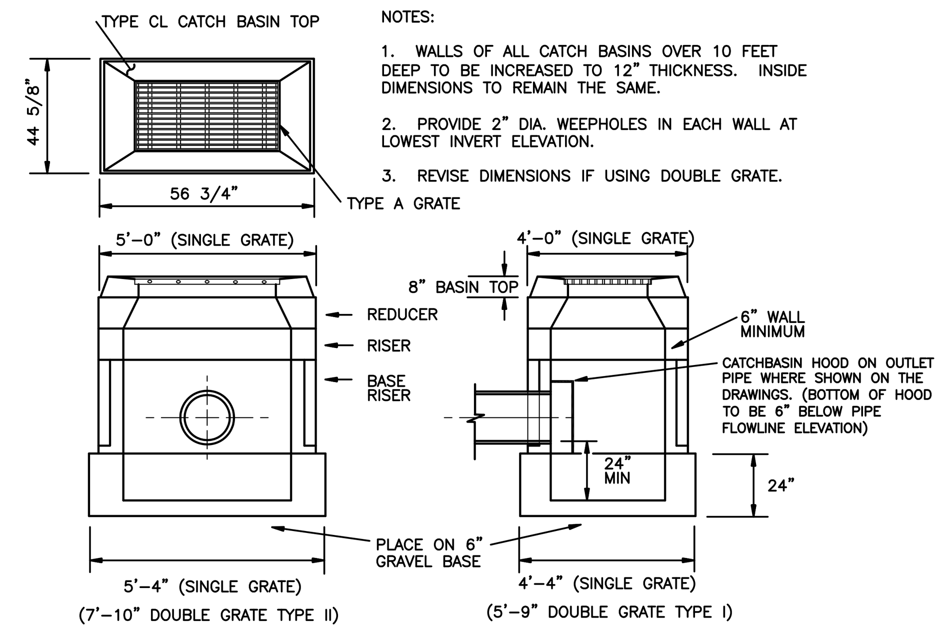

TYPE 'C-L' CATCH BASIN

NOT TO SCALE

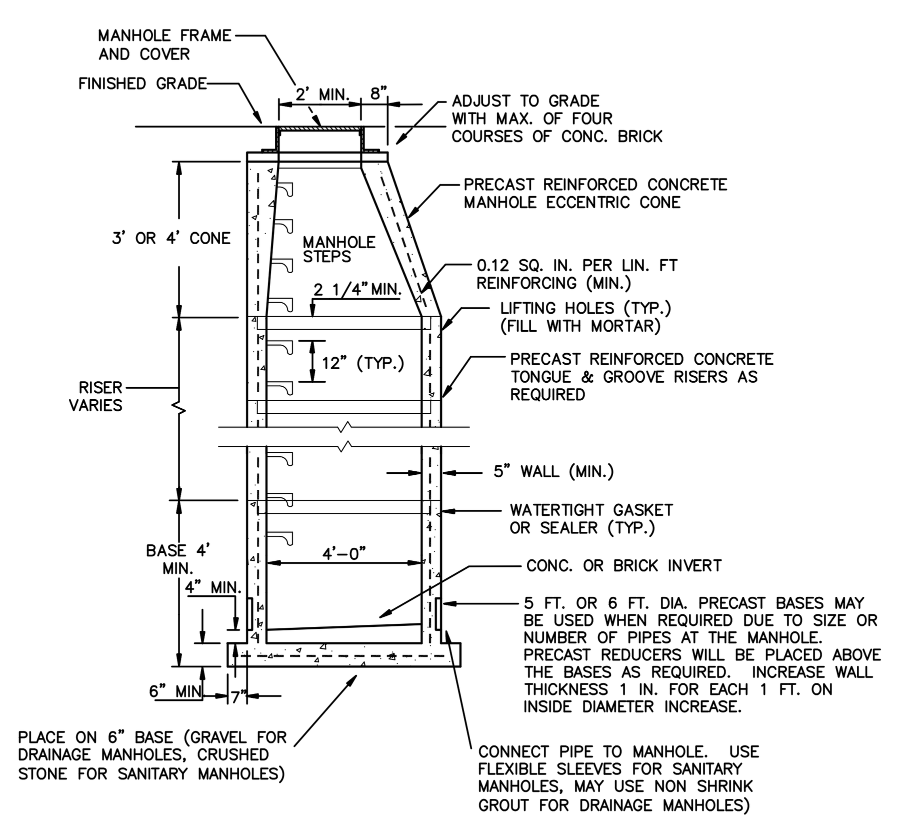

PRECAST CONCRETE MANHOLE

NOT TO SCALE

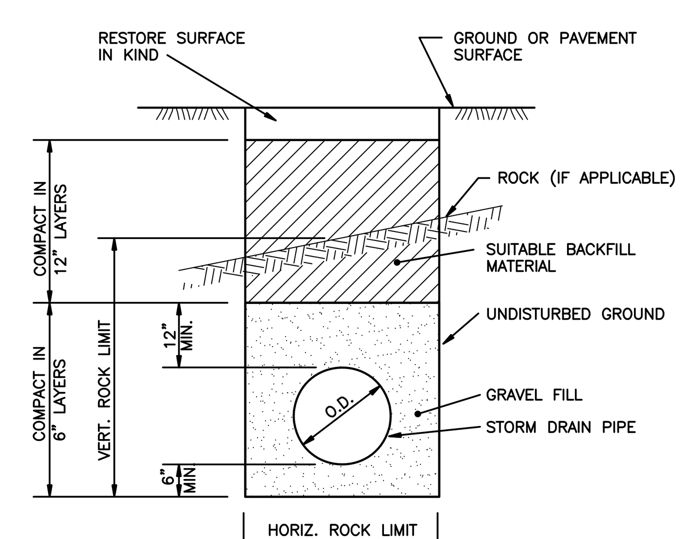

STORM DRAIN

* O.D. + 2' (PIPE <30")
O.D. + 3' (PIPE =>30")

TYPICAL TRENCH DETAIL

NOT TO SCALE

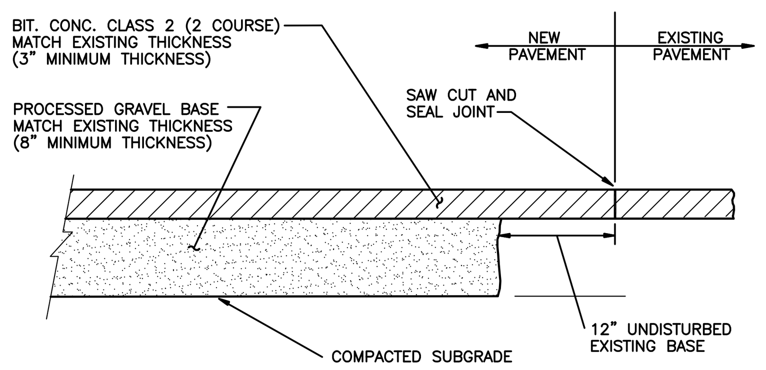

PARKING LOT PAVEMENT SECTION

NOT TO SCALE

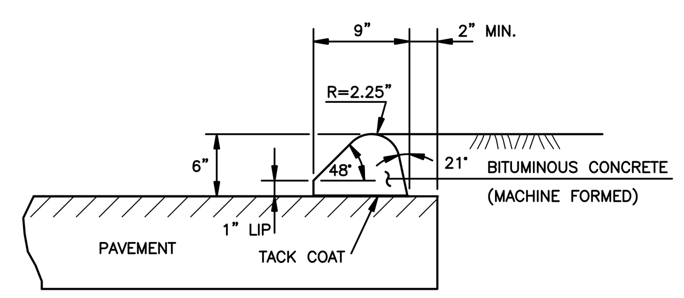

BITUMINOUS CONCRETE LIP CURBING

NOT TO SCALE

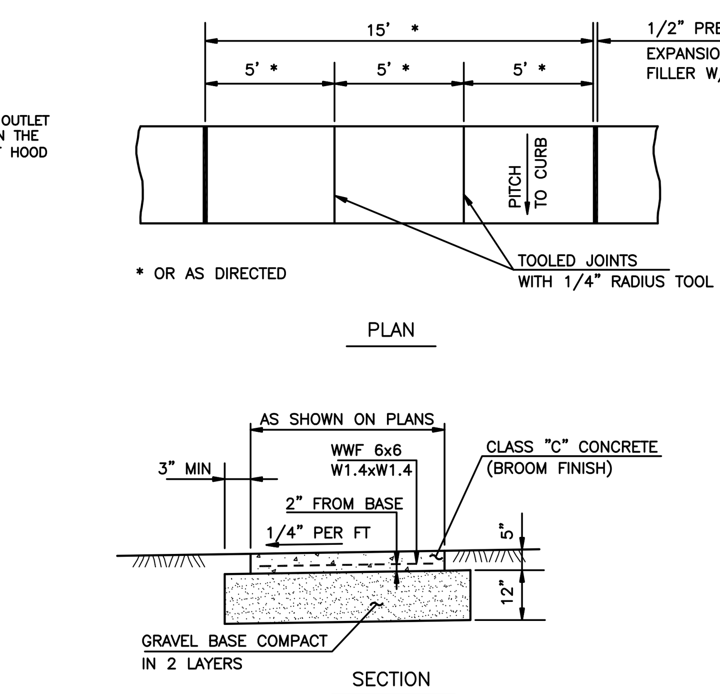

NOTE: PROVIDE AN EXPANSION JOINT BETWEEN CONCRETE SIDEWALKS AND BUILDINGS, WALLS OR OTHER FIXED FEATURES. 1/2 PREFORMED EXPANSION JOINT FILLER WITH JOINT SEALANT.

CONCRETE SIDEWALK

NOT TO SCALE

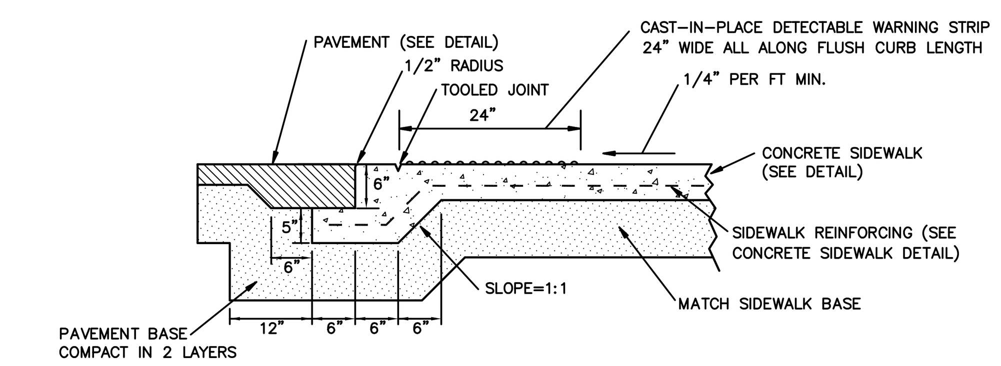

FLUSH CONCRETE CURBING AT SIDEWALK

NOT TO SCALE

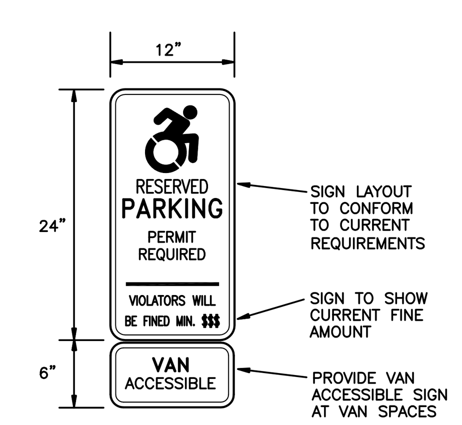

COLORS TO CONFORM TO THE "MANUAL ON UNIFORM TRAFFIC CONTROL DEVICES"

RESERVED PARKING SIGN

NOT TO SCALE

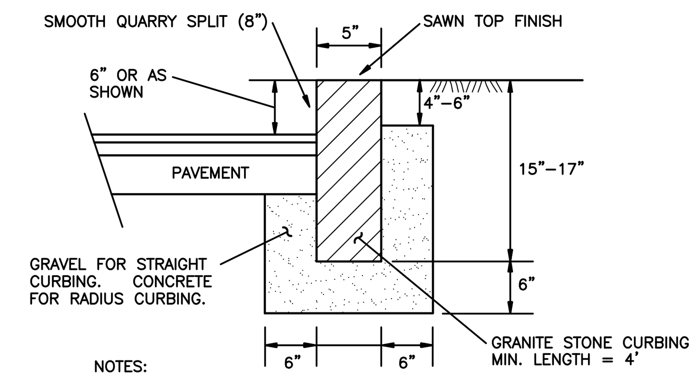

NOTES:

GRANITE CURB WITH A RADIUS OF LESS THAN 100' SHALL BE BUILT USING CURVED GRANITE CURB.

SET CURBING WITH 1/2" MORTARED JOINTS.

GRANITE CURBING

NOT TO SCALE

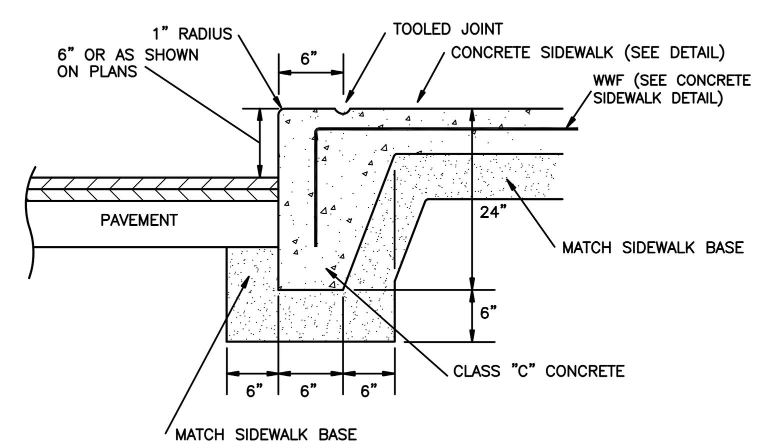

INTEGRAL CONCRETE CURBING AT SIDEWALK

NOT TO SCALE

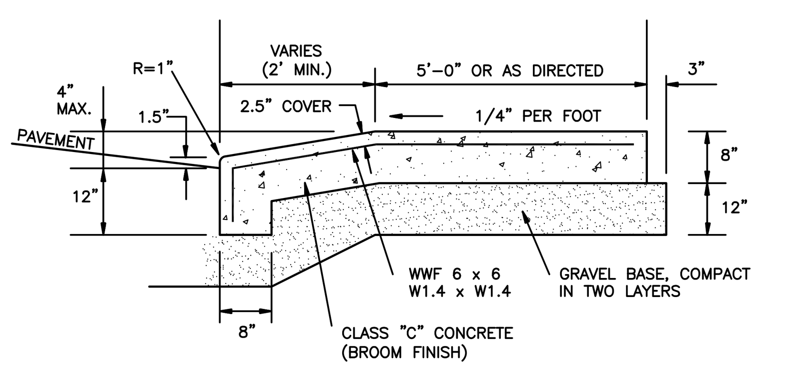

GRASS STRIP MORE THAN 2 FEET

CONCRETE DRIVEWAY RAMP

NOT TO SCALE

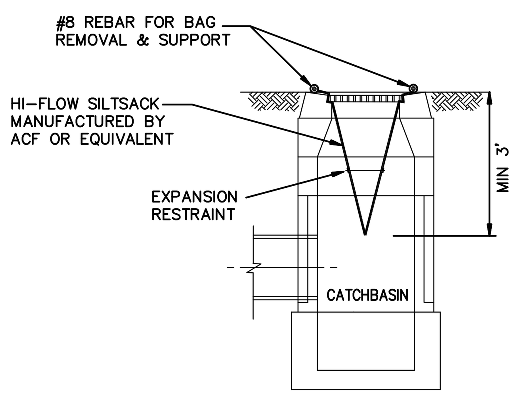

SILTSACKS SHALL BE EMPTIED WHEN THEY HAVE COLLECTED 0.5–1.0 FEET OF SEDIMENT. INSPECT EVERY 1 TO 2 WEEKS OR AFTER EVERY MAJOR RAINFALL.

TYPE 'A' SILTSACK FOR TYPE C-L CATCHBASINS (FLAT TOP)

TYPE 'B' SILTSACK FOR TYPE C CATCHBASINS (CURB INLET)

SILTSACK EROSION CONTROL AT CATCHBASIN

NOT TO SCALE

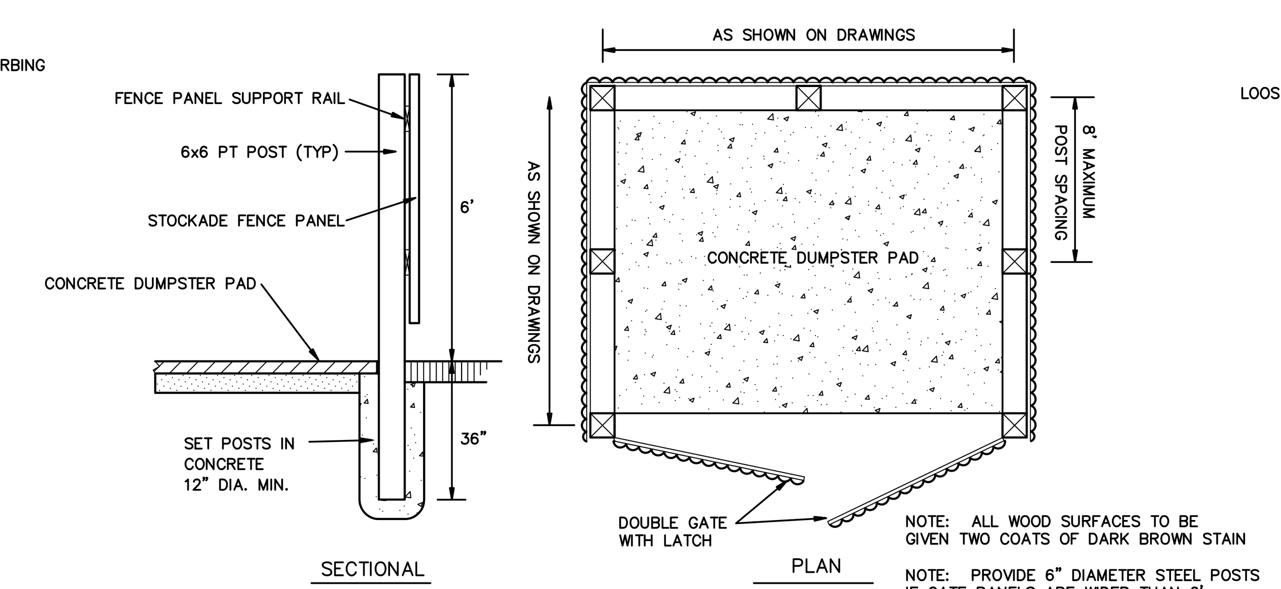

NOTE: ALL WOOD SURFACES TO BE GIVEN TWO COATS OF DARK BROWN STAIN

NOTE: PROVIDE 6" DIAMETER STEEL POSTS IF GATE PANELS ARE WIDER THAN 6'

STOCKADE SCREENING FENCE FOR DUMPSTER PAD

NOT TO SCALE

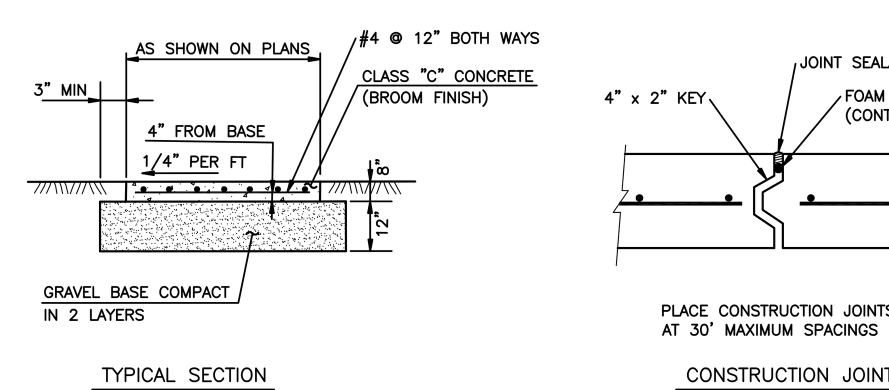

CONCRETE PAD

NOT TO SCALE

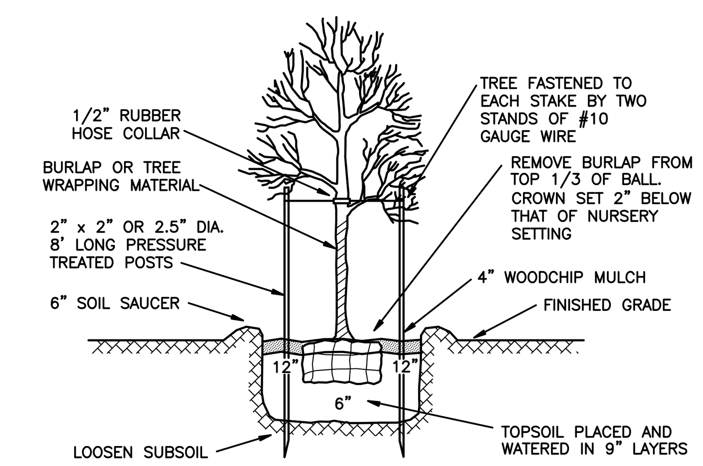

TREE PLANTING

NOT TO SCALE

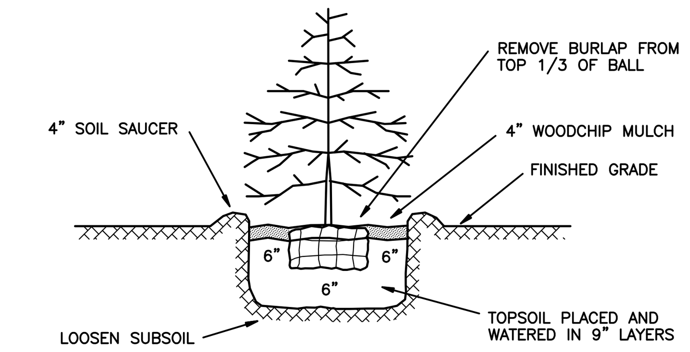

SHRUB PLANTING

NOT TO SCALE

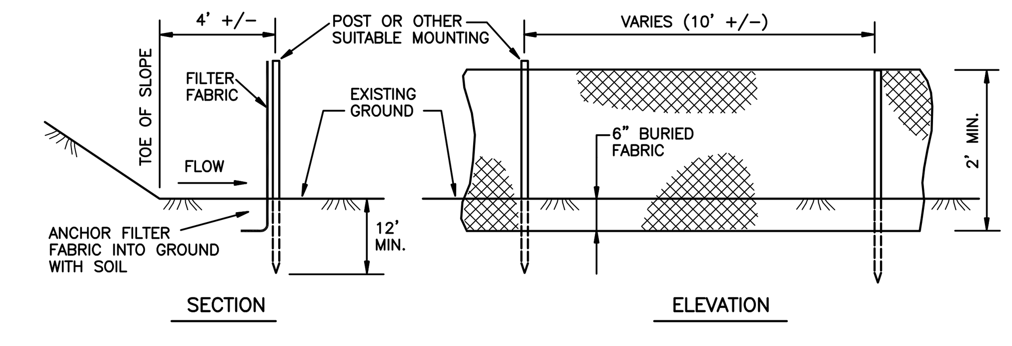

NOTE: POST SPACING AND EMBEDMENT VARIES BASED ON THE FABRIC MANUFACTURER'S REQUIREMENTS.

NOTE: SILT FENCE SHALL BE GEOTEX 2130 SILT FENCE FABRIC ON SUITABLE POSTS OR EQUIVALENT SILT FENCE SYSTEM

SILT FENCE

NOT TO SCALE

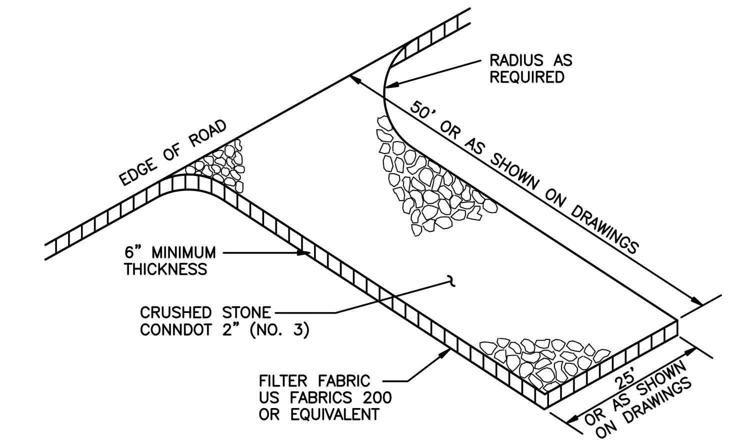

CONSTRUCTION ENTRANCE DETAIL

NOT TO SCALE

NOT FOR CONSTRUCTION – CONTACT HYDRO INTERNATIONAL FOR SITE SPECIFIC DRAWINGS

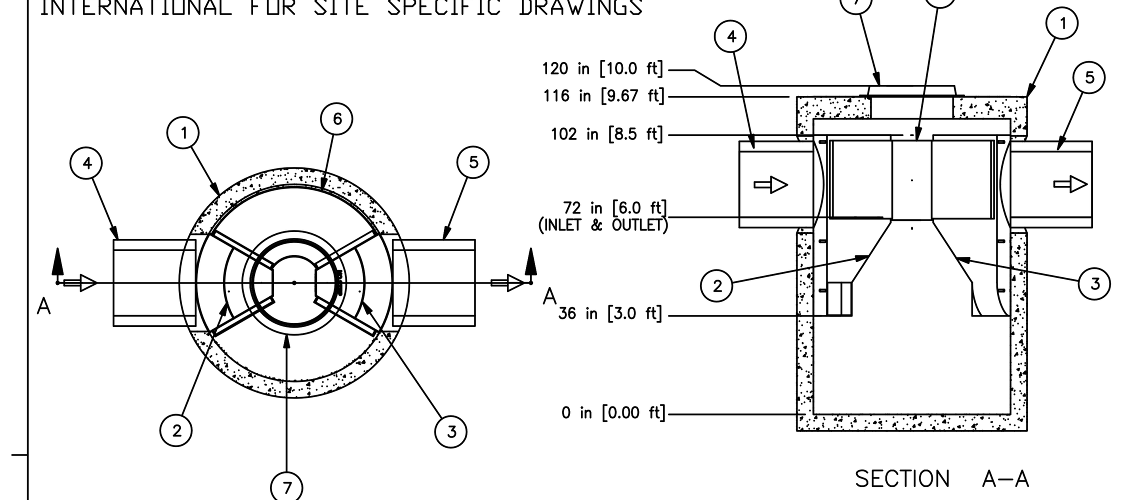

Notes

1. MANHOLE WALL AND SLAB THICKNESSES ARE NOT TO SCALE.
2. CONTACT HYDRO INTERNATIONAL FOR A BOTTOM OF STRUCTURE ELEVATION PRIOR TO SETTING FIRST DEFENSE MANHOLE.
3. CONTRACTOR TO CONFIRM RIM, PIPE INVERTS, PIPE DIA. AND PIPE ORIENTATION PRIOR TO RELEASING UNIT TO FABRICATION.

REV	BY	DATE	DESCRIPTION
B	MJ	2/19/14	SUMP DEPTH
A	JL	6/10/13	QTY. LIST

REVISION HISTORY

Date 11/1/2011 | Scale 1/4"=1'-0"

Drawn EMH | Checked MRJ | Approved MRJ

Title
6–FT DIAMETER
FIRST DEFENSE

GENERAL ARRANGEMENT

Hydro International

Stormwater Solutions
94 Hutchins Drive
Portland, Maine 04102
Tel: (207) 756–6200
Fax: (207) 756–6212
stormwaterinquiry@hydro–int.com

CAPACITIES:

1. PEAK HYDRAULIC FLOW: 18.0 cfs (510 l/s)
2. TREATMENT FLOW: 2.2 cfs (62 l/s)
3. SEDIMENT STORAGE CAPACITY: 0.52 cu. yd. (0.40 cu. m.)
4. OIL STORAGE CAPACITY: 420 gal. (1590 liters)

ADDITIONAL DESIGN INFORMATION:

1. MAXIMUM INLET/OUTLET PIPE DIAMETERS: 24 in.
2. MAXIMUM NUMBER OF INLET PIPES: 2
3. MINIMUM ANGLE BETWEEN PIPES: 90 DEGREES

Parts List

ITEM	QTY.	DESCRIPTION	SIZE (in)
1	1	I.D. CONCRETE MANHOLE	72
2	1	INLET CHUTE (W/ FLOATABLES TRAP)	
3	1	OUTLET CHUTE	
4	1	INLET PIPE (BY OTHERS)	24
5	1	OUTLET PIPE (BY OTHERS)	24
6	1	HIGH FLOW BYPASS	
7	1	FRAME AND COVER (OR GRATE)	30

©2012 Hydro International

Any warranty made by Hydro International only applies to those items supplied by it. Hydro International does not accept and expressly disclaims any responsibility or liability for any structure, plant or equipment (or the performance thereof) designed, built, manufactured or supplied by any third-party. Hydro International has a policy of continuous product development and reserves the right to amend the specifications of any of its products or equipment at any time. Hydro International expressly disclaims any liability for the performance of its equipment (or any part thereof) used or made subject to conditions outside of the conditions set forth in Hydro International's design specifications. Hydro International owns the copyright in and to this drawing, which is supplied in confidence, and all intended recipients of the drawing, by their use thereof, agree to hold the drawing in confidence and not to use it for any purpose other than for which it was supplied and not reproduce, in whole or in part, the drawing or any of the equipment or structures depicted therein, without prior written permission of Hydro International.

CAD Ref: F6GA
Project No.
Drawing No. F6GA Rev. B

6 FT DIA. FIRST DEFENSE

NOT TO SCALE

TOWN OF EAST HARTFORD
PLANNING AND ZONING COMMISSION
SITE PLAN CERTIFICATE OF APPROVAL

APPROVAL DATE:______________

EXPIRATION DATE:______________

__________________ CHAIRMAN

REVISION	DATE

SEAL & SIGNATURE:

NOTE:
THIS DRAWING IS AN INSTRUMENT OF SERVICE OF AND REMAINS THE PROPERTY OF MEEHAN & GOODIN. IT IS TO BE USED ONLY FOR THIS SPECIFIC PROJECT AND SHALL NOT BE MODIFIED WITHOUT THE WRITTEN CONSENT OF MEEHAN & GOODIN. ANY UNAUTHORIZED MODIFICATIONS WILL INVALIDATE ALL SIGNATURES, CERTIFICATIONS AND DECLARATIONS CONTAINED HEREON.

Meehan & Goodin
Engineers – Surveyors, P.C.
387 North Main Street, Manchester, CT 06042
(860) 643-2520 FAX (860) 649-8806

PLAN PREPARED FOR

KIA OF EAST HARTFORD

99 ASH STREET — EAST HARTFORD, CONN.

SITE DETAILS

SCALE: AS NOTED	DESIGN: OT	PROJECT: 17113	17113-DETAIL.DWG
DATE: 11-2-2017	DRAFT: ERJ	Q://SC13/WORK	SHEET NO. 7 OF 10

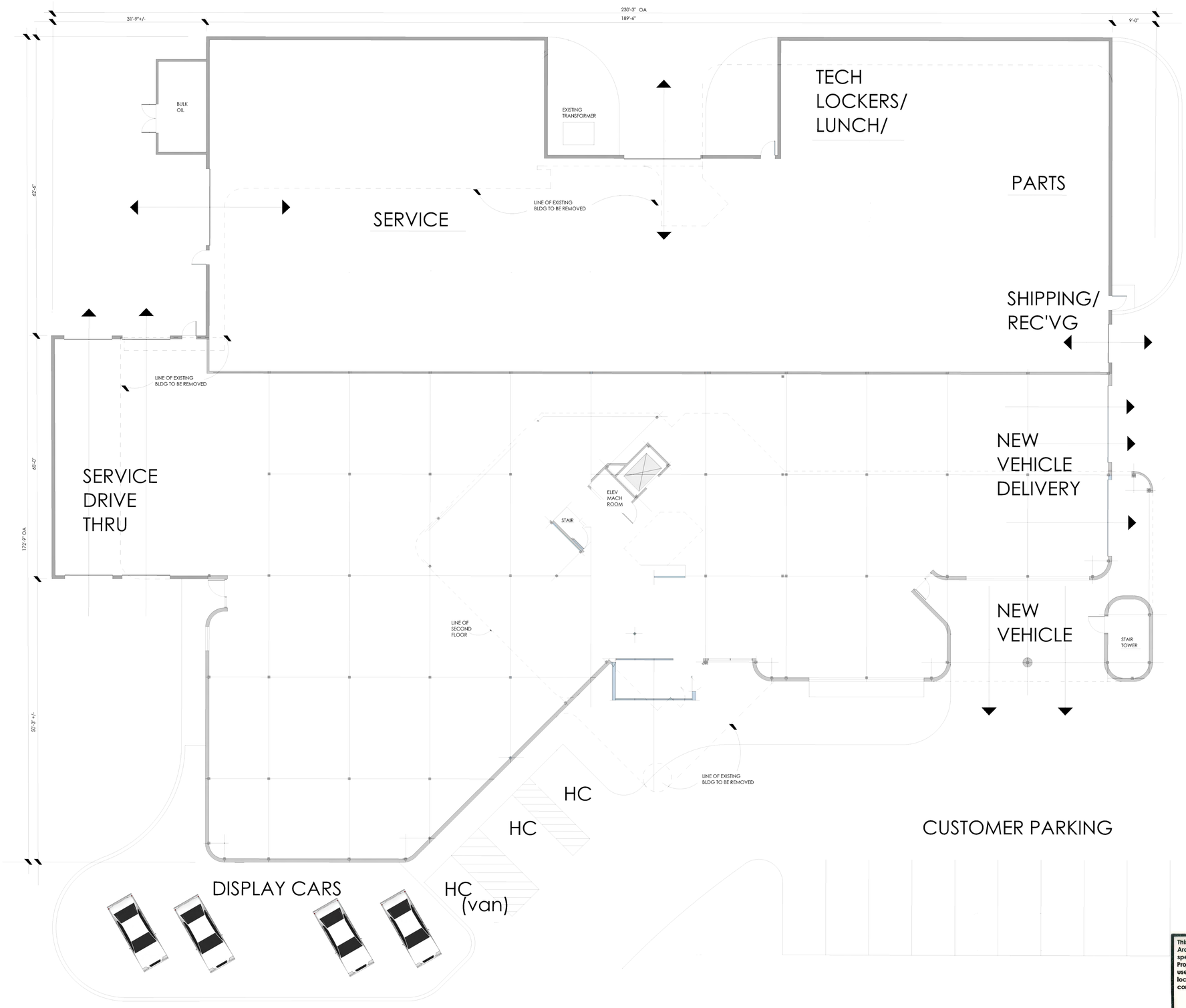

FIRST FLOOR PLAN
1" = 10 FEET

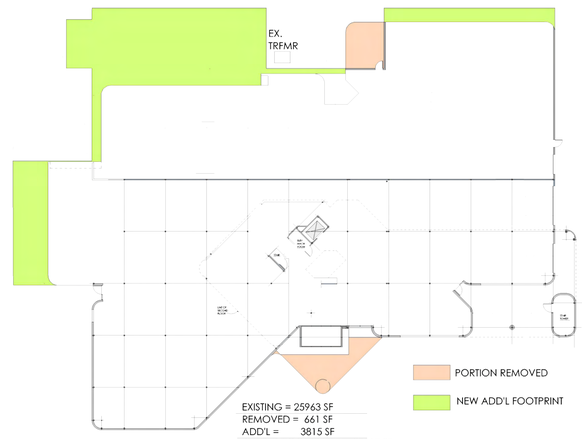

EXISTING AND PROPOSED FOOTPRINT

EXISTING = 25963 SF
REMOVED = 661 SF
ADD'L = 3815 SF
REVISED FOOTPRINT = 29117 SF
NET CHANGE = +3154 SF

24 October 2017

This drawing is the property of the Architect, has been prepared specifically for the Owner for this Project at this site and is not to be used for any other purposes, location or owner without the written consent of the Architect.

FIRST FLOOR PLAN

Proposed New Facility
KIA of East Hartford
99 Ash Street, East Hartford, CT

Design Two
188 Lovers Lane · Guilford, Connecticut 06437
Tel: 203 458 3956 / Fax: 203 453 0692

A1

EXISTING BUILDING

PROPOSED NEW FACILITY

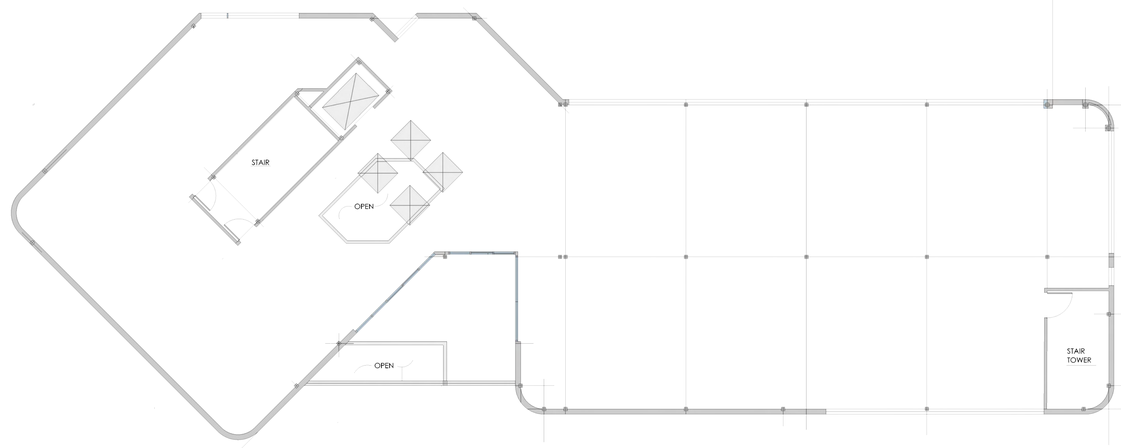

EXISTING SECOND FLOOR PLAN
1" = 10 FEET

Signs shown are illustrative only pending separate sign application

24 October 2017

This drawing is the property of the Architect, has been prepared specifically for the Owner for this Project at this site and is not to be used for any other purposes, location or owner without the written consent of the Architect.

SECOND FLOOR PLAN

Proposed New Facility
KIA of East Hartford
99 Ash Street, East Hartford, CT

Design Two
188 Lovers Lane · Guilford, Connecticut 06437
Tel: 203 458 3956 / Fax: 203 453 0692

A2

NORTH (FRONT) ELEVATION

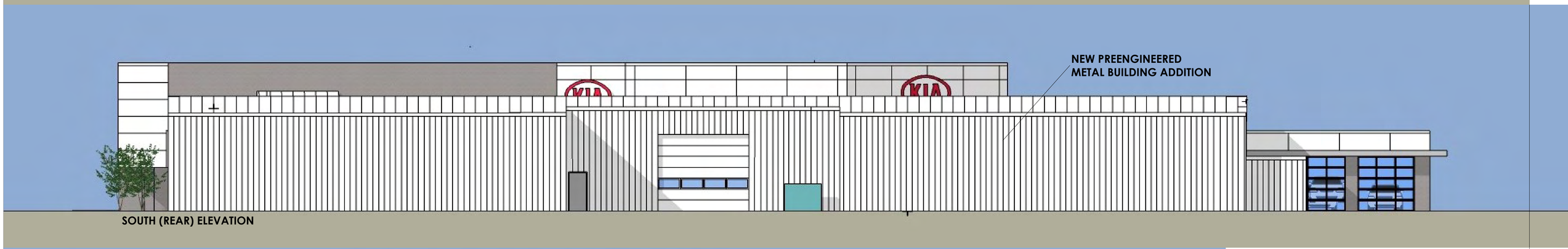

SOUTH (REAR) ELEVATION

WEST ELEVATION

EAST ELEVATION

Signs shown are illustrative only pending separate sign application

BUILDING ELEVATIONS

1/8" = 1 FOOT

24 October 2017

EXTERIOR ELEVATIONS

Proposed New Facility
KIA of East Hartford
99 Ash Street, East Hartford, CT

Design Two
188 Lovers Lane · Guilford, Connecticut 06437
Tel: 203 458 3956 / Fax: 203 453 0692

A3